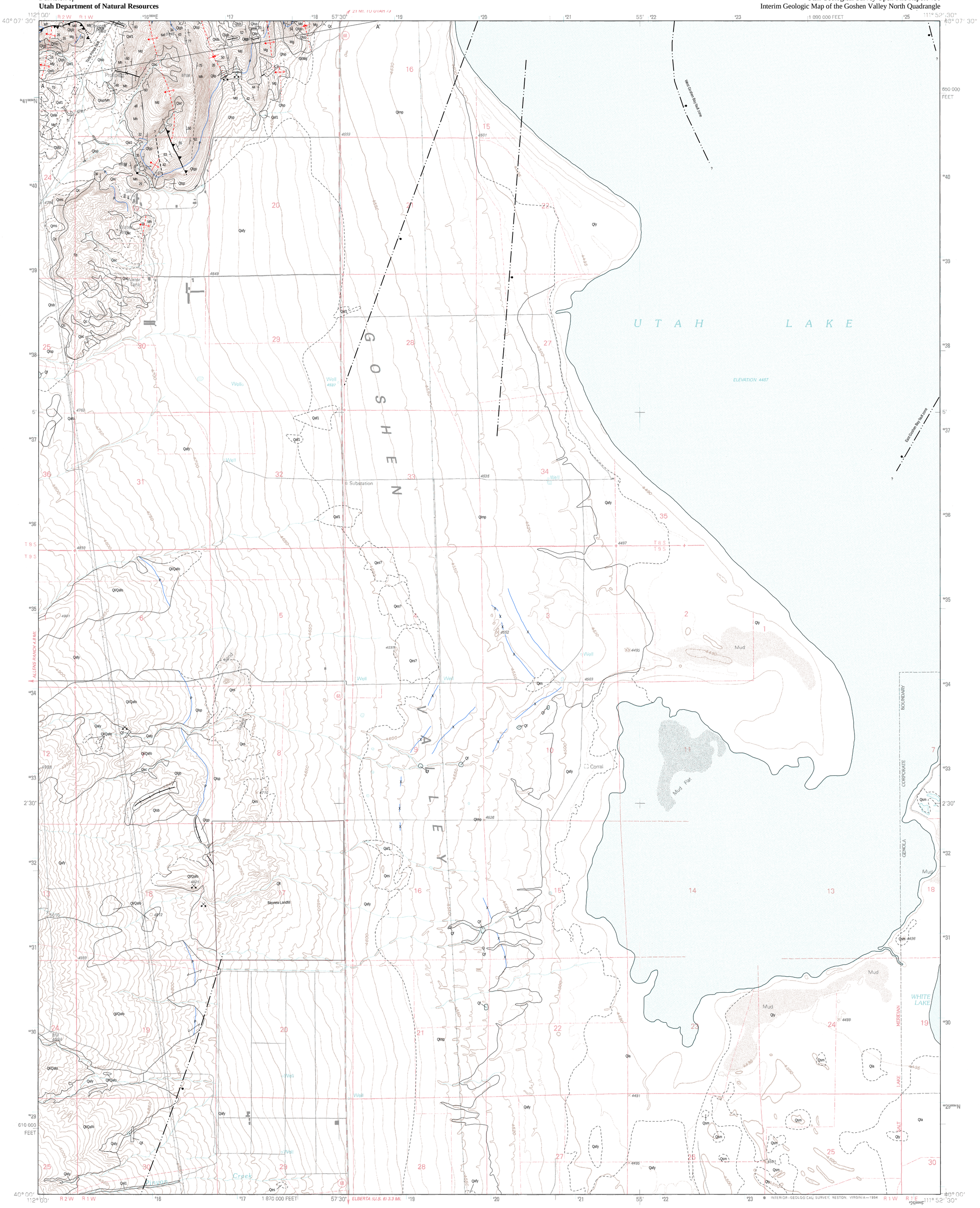

Base from U.S. Geological Survey,
Goshen Valley North Quadrangle, 1994

North American Datum of 1927 (NAD27).

SCALE 1:24000

1 0.5 0 1 2 Miles

Field mapping by authors, 2006
Photogrammetry and Digital Cartography:
Kent D.Brown and Donald L. Clark

Disclaimer

This Open-File release makes information available to the public during the review and production period necessary for a formal UGS publication. This map may be incomplete, and inconsistencies, errors, and omissions have not been resolved. While the document is in the review process, it may not conform to UGS standards; therefore it may be premature for an individual or group to take actions based on its contents.

Although this product represents the work of professional scientists, the Utah Department of Natural Resources, Utah Geological Survey, makes no warranty, expressed or implied, regarding its suitability for a particular use. The Utah Department of Natural Resources, Utah Geological Survey, shall not be liable under any circumstances for any direct, indirect, special, incidental, or consequential damages with respect to claims by users of this product.

For use at 1:24,000 scale only. The UGS does not guarantee accuracy or completeness of the data.

This geologic map was funded by the Utah Geological Survey and U.S. Geological Survey, National Cooperative Geologic Mapping Program, through USGS STATEMAP award number 05HQAG0084. The views and conclusions contained in this document are those of the author and should not be interpreted as necessarily representing the official policies, either expressed or implied, of the U.S. Government.

Interim Geologic Map of the Goshen Valley North Quadrangle, Utah County, Utah

by
Donald L. Clark[1], Robert F. Biek[1], and Eric H. Christiansen[2]
2006

[1] Utah Geological Survey, P.O. Box 146100, Salt Lake City, UT 84114-6100;
[2] Department of Geological Sciences, Brigham Young University, Provo, UT 84602

Interim Geologic Map of the Goshen Valley North Quadrangle, Utah County, Utah

by
Donald L. Clark[1], Robert F. Biek[1], and Eric H. Christiansen[2]

[1]Utah Geological Survey, P.O. Box 146100, Salt Lake City, UT 84114-6100
[2]Brigham Young University, Department of Geological Sciences, Provo, UT 84602

Disclaimer

This Open-File release makes information available to the public during the review and production period necessary for a formal UGS publication. This map may be incomplete, and possible inconsistencies, errors, and omissions have not been resolved. While the document is in the review process, it may not conform to UGS standards; therefore it may be premature for an individual or group to take actions based on its contents.

Although this product represents the work of professional scientists, the Utah Department of Natural Resources, Utah Geological Survey, makes no warranty, expressed or implied, regarding its suitability for a particular use. The Utah Department of Natural Resources, Utah Geological Survey, shall not be liable under any circumstances for any direct, indirect, special, incidental, or consequential damages with respect to claims by users of this product.

For use at 1:24,000 scale only. The UGS does not guarantee accuracy or completeness of the data.

This geologic map was funded by the Utah Geological Survey and U.S. Geological Survey, National Cooperative Geologic Mapping Program, through USGS STATEMAP award number 05HQAG0084. The views and conclusions contained in this document are those of the author and should not be interpreted as necessarily representing the official policies, either expressed or implied, of the U.S. Government.

OPEN-FILE REPORT 486
UTAH GEOLOGICAL SURVEY
a division of
Utah Department of Natural Resources
2006

MAP UNIT DESCRIPTIONS

QUATERNARY

Alluvial deposits

Qal_1 **Modern stream deposits** (Holocene) − Moderately sorted sand, silt, clay, and pebble to boulder gravel deposited in active stream channels and flood plains; locally includes small alluvial-fan and colluvial deposits, and minor terraces up to about 10 feet (3 m) above current base level; mapped in a few ephemeral washes draining the southern Lake Mountains (formerly Mosida Hills) and along Pinyon Creek; typically less than 20 feet (<6 m) thick.

Qaly **Younger alluvial deposits** (Holocene to Upper Pleistocene) – Moderately sorted sand, silt, clay, and local pebble gravel deposited in stream channels and flood plains; mapped along some drainages on margin of Goshen Valley; grades to young alluvial-fan deposits (Qafy); thickness probably less than 20 feet (<6 m).

Qaf_1 **Level-1 alluvial-fan deposits** (Holocene) − Poorly to moderately sorted, non-stratified, clay- to boulder-size sediment deposited principally by debris flows and debris floods at the mouths of active drainages; upper parts typically characterized by abundant boulders and debris-flow levees that radiate away from the apex of the fan; equivalent to the younger part of Qafy, but differentiated because they form smaller, isolated fans; probably less than 20 feet (<6 m) thick.

Qafy **Young undifferentiated alluvial-fan deposits** (Holocene to Upper Pleistocene) − Similar to level-1 alluvial-fan deposits (Qaf_1), but forms coalesced apron of post-Bonneville sediment shed off the East Tintic Mountains area; also includes coalesced fans emanating from plain of lacustrine mud (Qlmp) adjacent to Utah Lake; upper parts of fans are locally deeply incised; thickness unknown, but likely as much as several tens of feet thick.

Qafo **Old alluvial-fan deposits** (Upper to Middle Pleistocene) − Similar to young undifferentiated alluvial-fan deposits (Qafy), but forms deeply dissected alluvial apron truncated by, and thus predating, the Provo-level shoreline; upper parts of fans locally receive sediment from minor washes and locally possess veneer of lacustrine deposits; thickness unknown, but may locally exceed several tens of feet thick.

Spring Deposits

Qsm **Spring and marsh deposits** (Holocene) – Silt and clay with local sand; present in low-lying areas of Goshen Valley where seeps, springs, and marshy areas exist within areas of younger lacustrine deposits (Qly); thickness probably 0 to 10 feet (0-3 m).

Lacustrine deposits

Deposits of the Provo (regressive) phase of the Bonneville lake cycle (Currey and Oviatt, 1985) are identified with the last map symbol letter "p," and deposits of the Bonneville

(transgressive) phase of the Bonneville lake cycle are identified with the last map symbol letter "b."

Qly **Younger lacustrine deposits** (Holocene) − Silt, clay, and minor fine-grained sand deposited along the margin of Utah Lake; locally organic rich, and locally includes pebbly beach gravel; locally includes small areas of spring and marsh deposits (Qsm) and mixed lacustrine and alluvial deposits (Qla) difficult to map at this scale; probably 0 to 10 feet (0-3 m) thick.

Qlgb, Qlgp

Lacustrine gravel and sand (Upper Pleistocene) − Moderately to well-sorted, moderately to well-rounded, clast-supported, pebble to cobble gravel and lesser pebbly sand; thin to thick bedded; typically interbedded with or laterally gradational to sand and silt facies; gastropods common in sandy lenses; locally partly cemented with calcium carbonate; typically forms wave-cut or wave-built benches, bars, and spits; wave-cut benches are commonly partly covered by colluvium derived from adjacent oversteepened slopes; intermediate shorelines are locally well developed on Provo-level deposits; Qlgb deposited at and below highest Bonneville shoreline but above the Provo shoreline, and Qlgp deposited at and below the Provo shoreline; typically 0 to 30 feet (0-9 m) thick.

Qlsb, Qlsp

Lacustrine sand and silt (Upper Pleistocene) − Fine- to coarse-grained sand and silt with minor gravel; typically well sorted and laminated in thick beds; gastropods locally common; grades downslope from sandy nearshore deposits to finer grained offshore deposits; shorelines typically poorly developed on this facies; locally concealed by loess veneer; Qlsb deposited at and below highest Bonneville shoreline but above the Provo shoreline, and Qlsp deposited at and below the Provo shoreline; probably less than 30 feet (<9 m) thick.

Qlmp **Lacustrine silt and clay** (Upper Pleistocene) − Calcareous silt (marl) with minor clay and fine-grained sand; typically laminated, but weathers to appear thick bedded; locally grades upslope into lacustrine sand and silt (Qlsp) and locally concealed by loess veneer; shorelines typically poorly developed on this facies; contact with distal parts of younger alluvial-fan deposits is difficult to identify and commonly based on subtle geomorphic differences; Qlmp deposited below the Provo shoreline; thickness uncertain, but may exceed several tens of feet thick.

Qllp **Lagoon-fill deposits** (Upper Pleistocene) − Forms level, grassy areas behind offshore Provo-level gravel bars; not exposed, but likely consists of thick-bedded silt with sand and minor pebbles washed in from adjacent slopes; may be capped by loess, and is typically concealed by a veneer of colluvial deposits; probably less than 20 feet (<6 m) thick.

Colluvial deposits

Qc **Colluvial deposits** (Holocene to Upper Pleistocene) − Poorly to moderately sorted, angular, clay- to boulder-size, locally derived sediment deposited by slope wash and soil creep on moderate slopes and in shallow depressions; locally grades downslope into

mixed alluvial and colluvial deposits; because many bedrock slopes are covered by at least a veneer of colluvium, only the larger, thicker deposits are mapped; typically 0 to 20 feet (0-6 m) thick.

Eolian deposits

Qes **Eolian sand deposits** (Holocene to Upper Pleistocene) − Well- to very well-sorted, fine- to medium-grained, well-rounded, windblown sand near Allens Ranch Road and the Bayview Landfill; queried for uncertain correlation east of State Route 68 due to extensive cultivation; forms small dunes mostly stabilized by vegetation; locally overlapped by young alluvial-fan deposits (Qafy); may be locally derived from Provo-level off-shore sand deposits; typically 0 to 10 feet (0-3 m) thick.

Human-Made deposits

Qf **Fill and disturbed land** (Historical) − Local earth materials used to construct dams for stock and wildlife watering ponds and adjacent disturbed land of pond depressions; some small watering ponds not mapped due to scale constraints; thickness 0 to 20 feet (0-6 m).

Qfl **Sanitary landfill** (Historical) − Waste disposal areas, cover materials storage areas, and buffer land associated with the Bayview Landfill, operated by the South Utah Valley Solid Waste District, located in section 17, T. 9 S., R. 1 W.; driller's log indicates surficial deposits were encountered in a boring to a total depth of 270 feet (80 m) with the ground-water level at 245 feet (75 m) depth; variable thickness.

Mass-movement deposits

Qms **Landslide deposits** (Historical? to Upper Pleistocene) − Very poorly sorted, locally derived material deposited by rotational and translational movement; typically clay- to boulder-size debris; characterized by hummocky topography and chaotic bedding attitudes; developed on oversteepened slopes along margin of trachybasalt outcrop (Tb); undivided as to inferred age because new research shows that even landslides with subdued morphology (suggesting that they are older, weathered, and have not moved recently) may continue to exhibit slow creep or are capable of renewed movement if stability thresholds are exceeded (F.X. Ashland, Utah Geological Survey, verbal communication, April 2006); age and stability determinations require detailed geotechnical investigations; thickness highly variable.

Mixed-environment deposits

Qac **Alluvial and colluvial deposits** (Holocene to Upper Pleistocene) − Poorly to moderately sorted, generally poorly stratified, clay- to boulder-size, locally derived sediment deposited in swales and small drainages by fluvial, slope-wash, and creep processes; generally less than 20 feet (6 m) thick.

Qla **Lacustrine and alluvial deposits** (Holocene to Upper Pleistocene) – Moderately to well-sorted, fined-grained sand, silt, and clay; lower parts likely grade into silt and clay deposits of the Bonneville Lake cycle and upper parts grade into younger alluvial-fan and lacustrine deposits; mapped in Goshen Valley; thickness unknown.

Qmtc **Talus and colluvium** (Holocene to Upper Pleistocene) − Very poorly sorted, angular to subangular cobbles and boulders and finer-grained interstitial sediment deposited by rock fall and slope wash on and at the base of steep slopes; generally less than 20 feet (<6 m) thick.

Stacked-unit deposits

Stacked units are here used to denote various surficial and bedrock units, partly eroded by wave action associated with the rise and fall of Lake Bonneville, that are concealed by a discontinuous veneer of undifferentiated lacustrine gravel, sand, silt, or clay; coarser-grained lacustrine facies commonly exhibit intermediate-level shorelines.

Ql/Qafo

Lacustrine deposits over older alluvial-fan deposits (Upper Pleistocene/Upper Pleistocene) − Mapped along the western margin of Goshen Valley.

Qlsp/Mh

Lacustrine sand and silt over the Humbug Formation (Upper Pleistocene/Upper Mississippian) − Mapped in the Mosida Hills in the northwest corner of the quadrangle.

Ql/Mg

Lacustrine deposits over the Gardison Limestone (Upper Pleistocene/Lower Mississippian) − Mapped in the Mosida Hills in the northwest corner of the quadrangle.

Unconformity

TERTIARY

New informal names applied to Tertiary rock units as mapped in the adjacent Soldiers Pass quadrangle (see Biek and others, 2006). Also refer to Biek and others (2006) for geochemical data; updated geochronologic data is pending. The low hills south of Goshen Pass (see Goshen Pass quadrangle) were formerly known as the Mosida Hills and the hills between Goshen Pass and Soldiers Pass as the Fox Hills, but are not presently indicated as such on the topographic base map.

Tb **Trachybasalt lava of Mosida** (Lower Miocene) – Medium-dark-gray, weathering to light-olive-gray and blue-gray, porphyritic, potassic trachybasalt (or absarokite in some classifications) lava flow; phenocrysts (10 to 20%) of olivine (Fo_{60}), plagioclase (An_{60} to An_{70}) and clinopyroxene (Mg# 0.78 to 0.72) in a fine-grained groundmass; olivine commonly altered to iddingsite (rusty blebs); locally vesicular; forms blocky ledges at two outcrops in the Mosida Hills; source vent probably located near Soldiers Pass; older K-Ar age of about 17.0 Ma (McKee and others, 1993), $^{40}Ar/^{39}Ar$ age pending; exposed thickness from 50 to 100 feet (20-30 m); up to 120 feet (40 m) thick in adjacent Soldiers Pass quadrangle (Biek and others, 2006).

Unconformity

Tr **Rhyolite tuff of pumice pit** (Upper Eocene) – Yellowish-gray, weathering to grayish-orange and medium-dark-gray, non-welded, pumice-rich, porphyritic, rhyolitic ash-flow tuff; phenocrysts (20%) of quartz, reversely zoned plagioclase (An_{30} to An_{50}), Ba-rich sanidine (Or_{50} to Or_{75}), and biotite in a glassy groundmass; pumice fragments (20%) up to 6 inches (15 cm) and lithic fragments; forms three poor exposures in Mosida Hills; named for pit in section 17, T. 7 S., R. 1 W. (Soldiers Pass quadrangle); source vent unknown; tuff unit extends into the adjacent Allens Ranch quadrangle where it is well exposed in Chimney Rock Pass and overlies the Packard Rhyolite (E.H. Christiansen, Brigham Young University, unpublished data); preliminary $^{40}Ar/^{39}Ar$ age of 34.2 Ma (S.T. Nelson, Brigham Young University, unpublished data), updated $^{40}Ar/^{39}Ar$ age pending; exposed thickness is 10 feet (3 m); up to 60 feet (20 m) thick in adjacent Soldiers Pass quadrangle (Biek and others, 2006).

Major Unconformity

MISSISSIPPIAN

Mgb? **Great Blue Formation?, undivided** (Upper Mississippian) – cross section only

Mh **Humbug Formation** (Upper Mississippian) – Interbedded calcareous quartz sandstone, quartzite, and limestone that weather to ledgy slopes. Sandstone is light- to dark-brown weathering, pale yellowish brown to olive gray, medium to very thick bedded, variably calcareous or siliceous, fine to medium grained, locally with planar or low-angle cross-stratification. Limestone rarely contains dark-gray chert nodules and is: (1) light gray weathering, medium dark gray, medium to thick bedded, and fine grained with local small white chert blebs; (2) dark gray, very thick bedded with small white calcite blebs; or (3) locally medium to coarse grained with sparse fossil hash. Occurs as folded strata in the Mosida Hills; age from Morris and Lovering (1961); top not present, but exposed thickness is about 500 feet (150 m); the Humbug is 650 feet (200 m) thick in the East Tintic Mountains (Morris and Lovering, 1979) and about 700 to 750 feet (210-230 m) thick in the Lake Mountains (Biek, 2004; Biek and others, 2006).

Md **Deseret Limestone** (Upper to Lower Mississippian) – Medium- to very thick bedded, medium-dark-gray, variably sandy and fossiliferous limestone; contains distinctive white calcite nodules and blebs and local to common brown-weathering chert nodules; fossils include rugose corals, uncommon brachiopods, crinoids, bryozoans, and fossil hash; roughly lower 30 feet (9 m) consists of slope-forming, thin-bedded, black phosphatic chert and silty limestone and dolomite, likely of the basal Dell Phosphatic Member; occurs as folded strata in the Mosida Hills; upper contact is conformable and gradational and corresponds to a change from fossiliferous limestone to predominantly sandstone; age from Morris and Lovering (1961) and Sandberg and Gutschick (1984); thickness is

about 1000 feet (300 m) from cross section construction; the Deseret is 1000 feet (300 m) thick in the East Tintic Mountains (Morris and Lovering, 1979), and about 700 to 750 feet (210-230 m) thick in the Lake Mountains (Biek, 2004; Biek and others, 2006); previously mapped as the Pine Canyon limestone (Hoffman, 1951).

Mg **Gardison Limestone** (Lower Mississippian) – Medium- to very thick bedded, medium-gray to medium-dark-gray limestone, cherty limestone, and fossiliferous limestone; chert is present as black, irregularly shaped nodules and thin, discontinuous beds; fossils include rugose and colonial corals, brachiopods, gastropods, and bryozoans replaced by white calcite; occurs as folded strata in Mosida Hills; queried in exposure adjacent to Tintic Prince fault where uncertain correlation; upper contact appears conformable and gradational and generally corresponds to a break in slope, with slope-forming, thinner bedded, cherty limestone below and a slope-forming interval (basal Delle Phosphatic Member) overlain by thicker bedded, ledge- and cliff-forming limestone of the Deseret Limestone above; age from Morris and Lovering (1961); base not exposed, but exposed thickness is 400 feet (120 m); thickness of 500 feet (150 m) in East Tintic Mountains (Morris and Lovering, 1961), and about 500 to 650 feet (150-200 m) in Lake Mountains (Biek, 2004; Biek and others, 2006); the Gardison Limestone and underlying Fitchville Formation were previously mapped as the Gardner dolomite (Hoffman, 1951).

ACKNOWLEDGMENTS

Harold J. Bissell, Brigham Young University (BYU), conducted the first geologic mapping of surficial deposits in this area as part of his Ph.D. dissertation (1949), published in USGS Professional Paper (1963). He advised BYU graduate students Hoffman (1951) and Williams (1951) on mapping projects within and adjacent to the quadrangle, respectively. The late Paul Proctor, Brigham Young University, mapped the adjacent Allens Ranch quadrangle under contract to the UGS (Proctor, 1985). This area also served as a training ground for field classes led by Eric H. Christiansen at BYU, and several recent BYU undergraduate students contributed to the understanding of the southern Lake Mountains, Fox Hills, and Mosida Hills. Baxter and others (2005) and Christiansen and others (in preparation) recently conducted petrologic, geochemical, and geochronologic analyses on the Tertiary volcanic rocks of the area. Utah Geological Survey (UGS) geologists Grant Willis and Mike Hylland carefully reviewed the map and associated materials. Kent Brown (UGS) set up the digital photogrammetry.

REFERENCES

Baxter, N., Ward, T., Chandler, M.R., Zobell, E.A., Christiansen, E.H., Dorais, M.J., and Kowallis, B.J., 2005, Cenozoic extension and volcanism in the southern Lake Mountains, central Utah: Geological Society of America Abstracts with Programs, vol. 37, no. 7, p. 72.

Biek, R.F., 2004, Geologic maps of the Cedar Fort and Saratoga Springs quadrangles, Utah County, Utah: Utah Geological Survey Maps 201 and 202, 3 plates, scale 1:24,000.

Biek, R.F., Clark, D.L., and Christiansen, E.H., 2006, Interim geologic map of the Soldiers Pass quadrangle, Utah County, Utah: Utah Geological Survey Open-File Report, 2 plates, scale 1:24,000.

Bissell, H.J., 1949, Pleistocene sedimentation in southern Utah Valley, Utah: Ames, Iowa State University, Ph.D. dissertation.

-----1963, Lake Bonneville-geology of southern Utah Valley: U.S. Geological Survey Professional Paper 257-B, 130 p., scale 1:48,000.

Brimhall, W.H., Bassett, I.G., and Merritt, L.B., 1976, Reconnaissance study of deep-water springs and strata of Utah Lake: Provo, Utah, Mountainlands Association of Governments, Technical Report 3, 21 p.

Christiansen, E.H., Baxter, N., Ward, T., Zobell, E., Chandler, M.R., Dorais, M.J., Kowallis, B.J., Hart, G.L., and Clark, D.L., in preparation, Cenozoic volcanism in the southern Lake Mountains, central Utah, *in* Willis, G.C., Clark, D.L., Hylland, M.D., and Chidsey, T.C., editors, Utah Geological Association Guidebook to the Geology of Central Utah.

Cook, K.L., Edgerton, D.A., Serpa, L.F., and DePangher, M., 1997, Complete bouguer gravity anomaly map and geological interpretation of the southern Wasatch Front, Utah: Utah Geological and Mineral Survey Contract Report 97-1, 20 p., 1 plate, scale 1:100,000.

Currey, D.R., and Oviatt, C.G., 1985, Durations, average rates, and probable causes of Lake Bonneville expansions, stillstands, and contractions during the last deep-lake cycle, 32,000 to 10,000 years ago, *in* Kay, P.A., and Diaz, H.F., editors, Problems of and prospects for predicting Great Salt Lake levels – Proceedings of a NOAA conference, March 26-28, 1985: Salt Lake City, University of Utah, Center for Public Affairs and Administration, p. 9-24.

Floyd, A.R., 1993, An integrated gravity and magnetic analysis of the Mosida Hills, Utah County, Utah: Provo, Brigham Young University, M.S. thesis, 78 p.

Hoffman, F.H., 1951, Geology of the Mosida Hills area, Utah: Provo, Utah, Brigham Young University, M.S. thesis, 68 p., scale 1:12,000.

McKee, E.H., Best, M.G., Barr, D.L., and Tingey, D.L., 1993, Potassium-argon ages of mafic and intermediate-composition lava flows in the Great Basin of Nevada and Utah: Isochron/West, v. 60, p. 15-18.

Morris, H.T., and Lovering, T.S., 1961, Stratigraphy of the East Tintic Mountains, Utah: U.S. Geological Survey Professional Paper 361, 145 p.

-----1979, General geology and mines of the East Tintic mining district, Utah and Juab Counties, Utah: U.S. Geological Survey Professional Paper 1024, 203 p.

Proctor, P.D., 1985, Preliminary geologic map of the Allens Ranch quadrangle, North Tintic district, Utah County, Utah: Utah Geological and Mineral Survey Open-File Report 69, 18 p., 2 plates, scale 1:24,000.

Sandberg, C.A., and Gutschick, R.C., 1984, Distribution, microfauna, and source-rock potential of Mississippian Delle Phosphatic Member of Woodman Formation and equivalents, Utah and adjacent states, *in* Woodward, Jane, Meissner, F.F., and Clayton, J.L., editors, Hydrocarbon source rocks of the greater Rocky Mountain region: Rocky Mountain Association of Geologists Field Conference Guidebook, p. 135-178.

Williams, F.E., 1951, Geology of the north Selma Hills area, Utah County, Utah: Provo, Brigham Young University, M.S. thesis, 63 p., scale 1:12,000.

ADDITIONAL REFERENCES

Additional references pertaining to structure and regional mapping.

Clark, D.L., 2006, Interim geologic map of the West Mountain quadrangle: Utah Geological Survey Open-File Report, 2 plates, scale 1:24,000.

Cook, K.L., and Berg, J.W., Jr., 1961, Regional gravity survey along the central and southern Wasatch Front, Utah: U.S. Geological Survey Professional Paper 316-E, 89 p.

Davis, D.A., and Cook, K.L., 1983, Evaluation of low-temperature geothermal potential in Utah and Goshen Valleys and adjacent areas, Utah: Utah Geological and Mineral Survey Report of Investigation No. 179, Part I – Gravity survey 1983, 138 p., 2 plates, scale 1:100,000.

Machette, M.N., 1992, Surficial geologic map of the Wasatch fault zone, eastern part of Utah Valley, Utah County, and parts of Salt Lake and Juab Counties, Utah: U.S. Geological Survey Miscellaneous Investigations Series Map I-2095, 1 plate, scale 1:50,000.

Morris, H.T., 1987, Preliminary geologic structure map of the Delta 2-degree quadrangle and adjacent areas, west-central Utah: U.S. Geological Survey Open-File Report 87-187, scale 1:250,000.

Morris, H.T., and Shepard, W.M., 1964, Evidence for a concealed tear fault with large displacement in the east central Tintic Mountains, Utah: U.S. Geological Survey Professional Paper 501-C, p. C19-C21.

Zoback, M.L., 1983, Structure and Cenozoic tectonism along the Wasatch fault zone, Utah: Geological Society of America Memoir 157, p. 3-27.

Map and Section Symbols

Contact, dashed where approximately located

Normal fault, dashed where approximately located, dotted where concealed and approximately located

Normal fault, concealed; inferred principally from gravity and other geophysical data (Brimhall and others, 1976; Floyd, 1993; Cook and others, 1997); very approximately located; bar and ball on down-dropped side

Tear fault, dashed where approximately located, dotted where concealed and approximately located; arrows show relative direction of movement

Thrust fault, dotted where concealed and approximately located; teeth on upper plate

Axial trace of anticline, dashed where approximately located, dotted where concealed and approximately located

Axial trace of syncline, dashed where approximately located, dotted where concealed and approximately located

Lake Bonneville shorelines – Major shorelines of the Bonneville lake cycle. Mapped at the top of the wave-cut platform

Y — Other shorelines of the Bonneville (transgressive) phase

P — Highest shoreline of the Provo (regressive) phase

X — Other shorelines of the Provo phase

Crest of Lake Bonneville off-shore bar or spit

A A' — Line of cross section

Strike and dip of bedding

20 — Inclined

1 — Approximate

Sand and gravel pit

Prospect

CORRELATION OF MAP UNITS
GOSHEN VALLEY NORTH QUADRANGLE

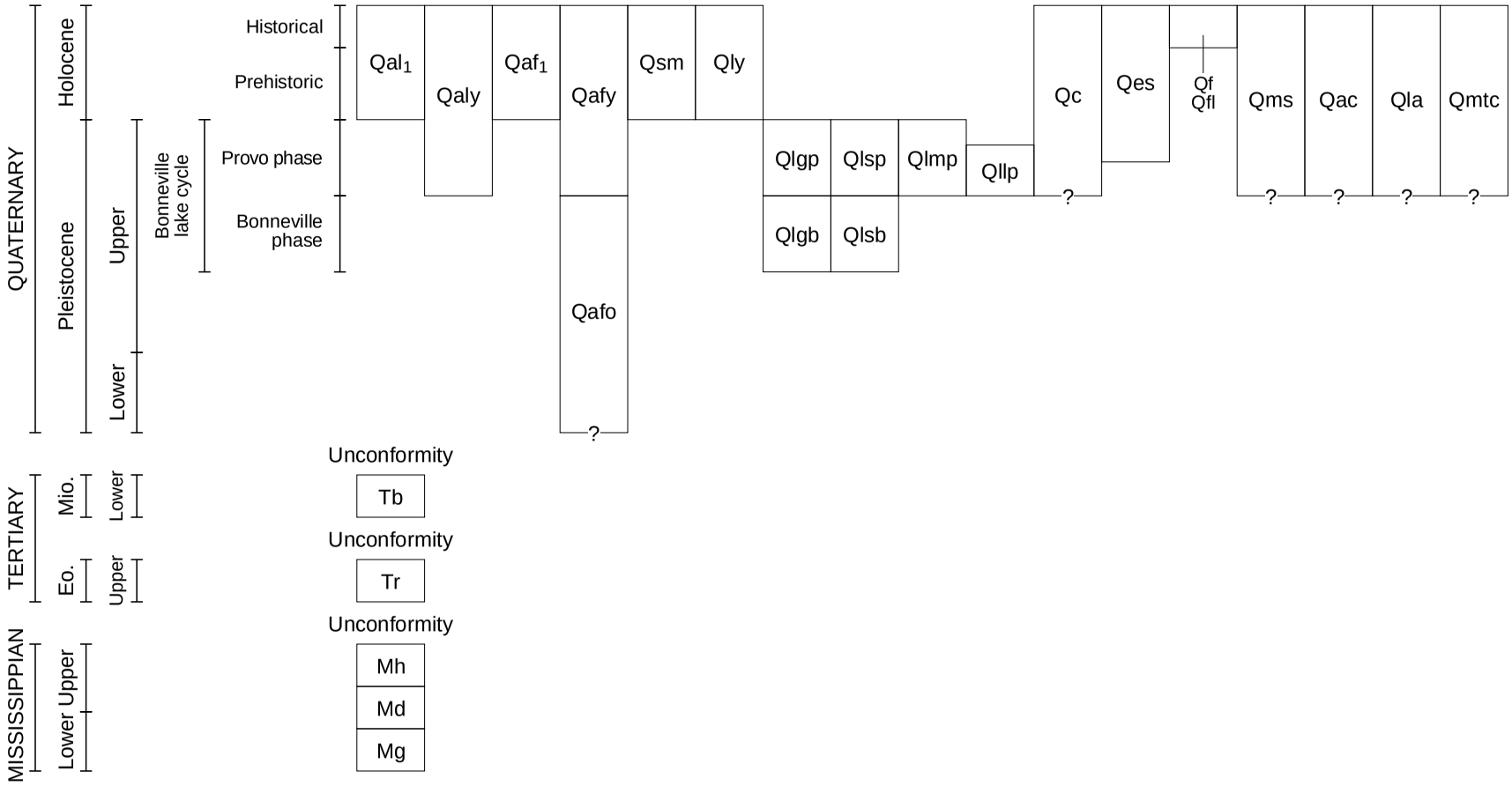

LITHOLOGIC COLUMN

Goshen Valley North Quadrangle

SYSTEM AND SERIES		AGE	FORMATION	SYMBOL	THICK-NESS Feet (Meters)	LITHOLOGY
TERT.	Mio.	lower	Trachybasalt lava of Mosida	Tb	50-100 (20-30)	17.0 Ma K-Ar Unconformity
	Eo.	upper	Rhyolite tuff of pumice pit	Tr	10+ (3+)	34.2 Ma Ar/Ar
Major unconformity						
MISSISSIPPIAN	Upper		Humbug Formation	Mh	500+ (150)+	Top not exposed
			Deseret Limestone	Md	1000 (300)	
	Lower		Gardison Limestone	Mg	400+ (120)+	Phosphatic chert Base not exposed

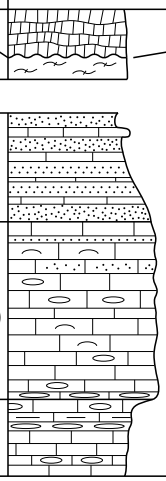

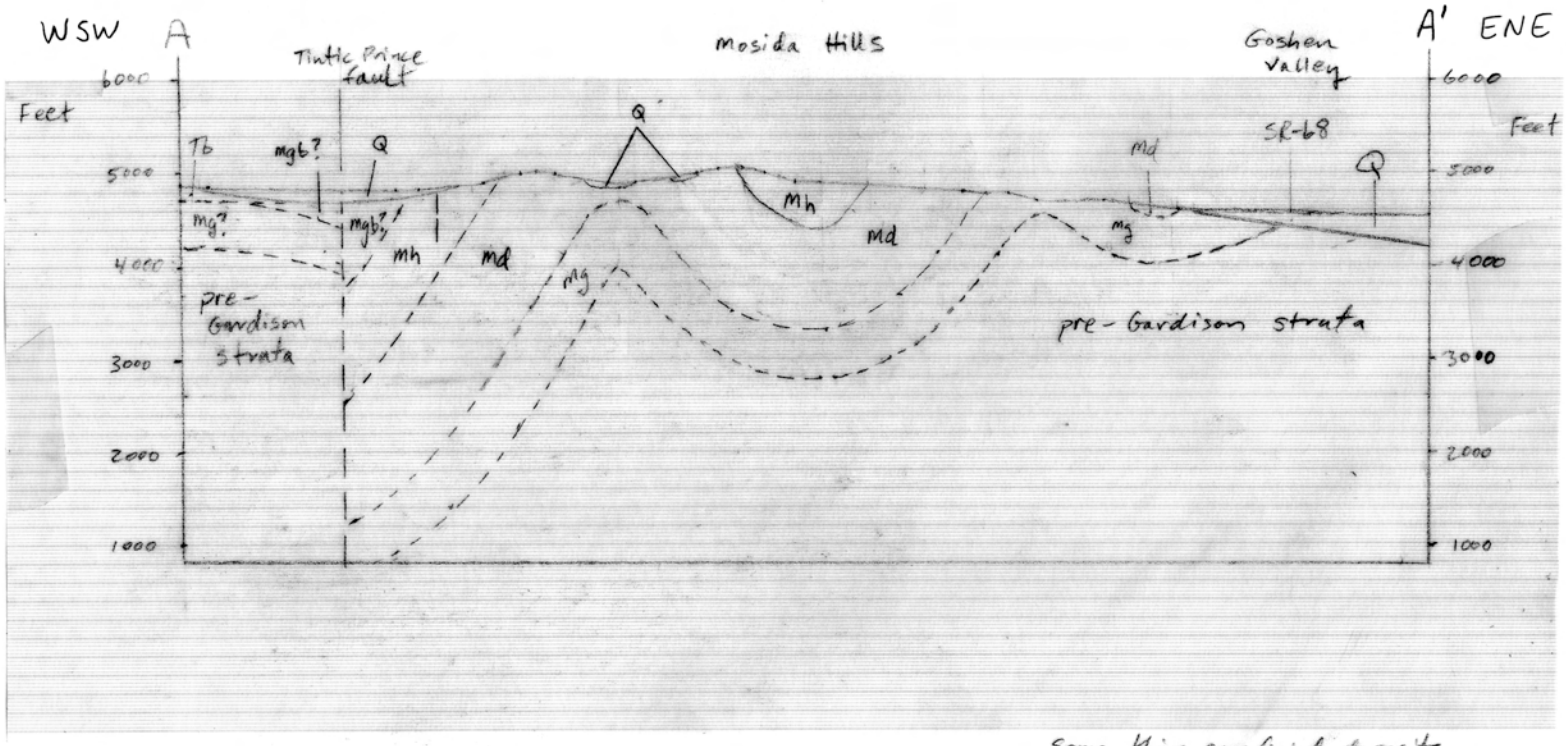

Some thin surficial deposits omitted

Goshen Valley North