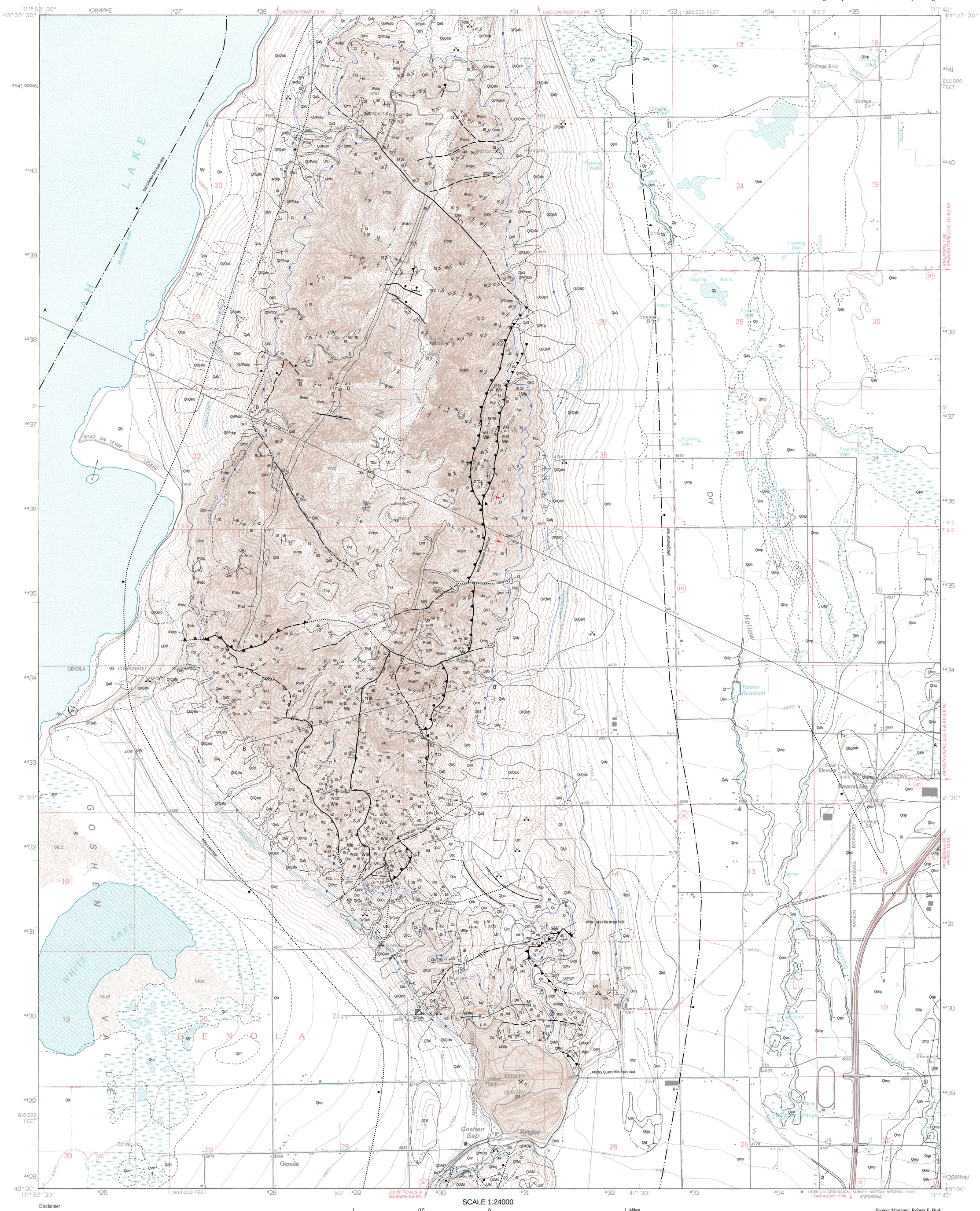

SCALE 1:24000

1 0.5 0 1 Miles

Project Manager: Robert F. Biek
Field mapping by author, October-November 2005 and April 2006
Photogrammetry: Donald L. Clark and Kent D. Brown

Disclaimer

This Open-File release makes information available to the public during the review and production period necessary for a formal UGS publication. This map may be incomplete, and inconsistencies, errors, and omissions have not been resolved. While the document is in the review process, it may not conform to UGS standards; therefore it may be premature for an individual or group to take actions based on its contents.

Although this product represents the work of professional scientists, the Utah Department of Natural Resources, Utah Geological Survey, makes no warranty, expressed or implied, regarding its suitability for a particular use. The Utah Department of Natural Resources, Utah Geological Survey, shall not be liable under any circumstances for any direct, indirect, special, incidental, or consequential damages with respect to claims by users of this product.

For use at 1:24,000 scale only. The UGS does not guarantee accuracy or completeness of the data.

This geologic map was funded by the Utah Geological Survey and U.S. Geological Survey, National Cooperative Geologic Mapping Program, through USGS STATEMAP award number 05HQAG0084. The views and conclusions contained in this document are those of the author and should not be interpreted as necessarily representing the official policies, either expressed or implied, of the U.S. Government.

Interim Geologic Map of the West Mountain Quadrangle, Utah County, Utah

by
Donald L. Clark
2006

Interim Geologic Map of the West Mountain Quadrangle, Utah County, Utah

by

Donald L. Clark

Disclaimer

This Open-File release makes information available to the public during the review and production period necessary for a formal UGS publication. This map may be incomplete, and possible inconsistencies, errors, and omissions have not been resolved. While the document is in the review process, it may not conform to UGS standards; therefore it may be premature for an individual or group to take actions based on its contents.

Although this product represents the work of professional scientists, the Utah Department of Natural Resources, Utah Geological Survey, makes no warranty, expressed or implied, regarding its suitability for a particular use. The Utah Department of Natural Resources, Utah Geological Survey, shall not be liable under any circumstances for any direct, indirect, special, incidental, or consequential damages with respect to claims by users of this product.

For use at 1:24,000 scale only. The UGS does not guarantee accuracy or completeness of the data.

This geologic map was funded by the Utah Geological Survey and U.S. Geological Survey, National Cooperative Geologic Mapping Program, through USGS STATEMAP award number 05HQAG0084. The views and conclusions contained in this document are those of the author and should not be interpreted as necessarily representing the official policies, either expressed or implied, of the U.S. Government.

OPEN-FILE REPORT 482
UTAH GEOLOGICAL SURVEY
a division of
Utah Department of Natural Resources
2006

MAP UNIT DESCRIPTIONS

QUATERNARY

Alluvial Deposits

Qal1 **Stream alluvium** (Holocene) - Moderately sorted sand, silt, clay, and pebble to boulder gravel deposited in stream channels; grades to younger alluvial fan deposits (Qafy) and is equivalent to the upper part of younger alluvial deposits (Qaly); locally includes small alluvial-fan and colluvial deposits; mapped in ephemeral washes of West Mountain; 0 to 20 feet (0-6 m) thick.

Qaly **Younger alluvial deposits** (Holocene to Upper Pleistocene) - Moderately sorted sand, silt, clay, and local pebble gravel deposited in stream channels and flood plains; mapped along several drainages within Utah Valley; grades to spring and marsh deposits (Qsm); thickness probably less than 20 feet (<6 m).

Qaf1 **Level-1 alluvial-fan deposits** (Holocene) - Poorly to moderately sorted, clay- to boulder-size sediment deposited principally by debris flows at the mouths of active drainages; equivalent to the younger part of Qafy, but differentiated because Qaf1 forms smaller, isolated fans; probably less than 20 feet (6 m) thick.

Qafy **Younger alluvial-fan deposits** (Holocene to Upper Pleistocene) - Similar in composition to Qaf1; coalesced and individual alluvial fans emanating from West Mountain and spilling over or cutting through older alluvial fan deposits (Qafo); thickness unknown but likely several tens of feet.

Qafo **Older alluvial-fan deposits** (Upper Pleistocene) - Similar to younger alluvial-fan deposits (Qafy), but forms a deeply dissected alluvial apron truncated by, and therefore predating, the Bonneville-level shoreline; upper parts of fans locally receive sediment from minor washes; thickness unknown but likely several tens of feet.

Spring Deposits

Qsm **Spring and marsh deposits** (Holocene) - Silt and clay with local sand; present in low-lying areas of Utah Valley; grades to younger alluvial deposits (Qaly), but not present in distinct channels; thickness probably 0 to 10 feet (0-3 m).

Lacustrine Deposits

Deposits of the Provo (regressive) phase of the Bonneville lake cycle (Currey and Oviatt, 1985) are identified with the last map symbol letter “p,” and deposits of the Bonneville (transgressive) phase of the Bonneville lake cycle are identified with the last map symbol letter “b.”

Qly **Younger lacustrine and marsh deposits** (Holocene) - Silt, clay, and minor fine-grained sand deposited along the margin of Utah Lake; locally organic rich, locally forms gravelly beaches and berms; includes areas of spring and marsh deposits (Qsm) and mixed lacustrine and alluvial deposits (Qla) difficult to distinguish or map at target scale; thickness probably 0 to 20 feet (0-6 m).

Qlgb, Qlgp
Lacustrine gravel and sand (Upper Pleistocene) - Moderately to well-sorted, moderately to well-rounded, clast-supported pebble to cobble gravel and lesser pebbly sand; thin to thick bedded; typically interbedded with or laterally gradational to sand and silt facies; gastropods common in sandy lenses; locally partly cemented with calcium carbonate; Qlgb deposited at and below Bonneville-level shoreline but above the Provo-level shoreline; Qlgp deposited at and below the Provo-level shoreline; forms beach ridges, terraces, bars, and spits; 0 to 50 feet (0-15 m) thick.

Qlsb, Qlsp
Lacustrine sand and silt (Upper Pleistocene) - Coarse- to fine-grained sand and silt with minor gravel; typically well sorted and laminated in thick beds; gastropods locally common; grades downslope from sandy nearshore deposits to finer grained offshore deposits; shorelines typically poorly developed on this facies; Qlsb deposited at

and below the Bonneville-level shoreline but above the Provo-level shoreline; Qlsp deposited at and below the Provo level shoreline; probably less than 30 feet (9 m) thick.

Qlmp

Lacustrine silt and clay (Upper Pleistocene) - Calcareous silt (marl) with minor clay and fine-grained sand; typically thick bedded; deposited below the Provo-level shoreline in large areas of Utah Valley and Goshen Valley; contact with distal parts of alluvial fans can be difficult to identify and is based on subtle geomorphic differences; thickness unknown.

Qllb

Lagoon-fill deposits (Upper Pleistocene) - Lacustrine silt and sand, with minor pebble gravel; deposited in lagoon behind beach-ridge gravel of Bonneville shoreline; probably less than 20 feet (<6 m) thick.

Colluvial Deposits

Qc **Colluvial deposits** (Holocene to Pleistocene) - Slopewash deposits of clay- to boulder-size, locally-derived sediment deposited on upland slopes; generally less than 20 feet (6 m) thick.

Qco O**lder colluvial deposits** (Pleistocene) - Slopewash deposits of clay- to boulder-size, locally-derived sediment deposited on upland slopes; differentiated from map unit Qc by greater carbonate content in Qco; generally less than 20 feet (6 m) thick.

Human-Made Deposits

Qf **Fill** (Historical) - Local earth materials used to construct dams for stock and wildlife watering ponds and berms to divert drainages; several small watering-pond dams not mappable at 1:24,000 scale; also fill along railroad overpasses and Interstate 15 in Utah Valley; thickness 0 to 30 feet (0-10 m).

Qfd **Mine-dump deposits and disturbed land** (Historical) - Waste rock and overburden from aggregate quarries and gravel pits including the Keigley Quarry, Condie Pit, City of Payson Pit, and other smaller pits; variable thickness.

Qfl **Sanitary landfill** (Historical) - Waste disposal area and cover materials associated with the City of Payson landfill located in NW1/4 section 14, T. 9 S., R. 1 E; variable thickness.

Mass-Movement Deposits

Qms **Landslide deposits** (Holocene to Upper Pleistocene) - Very poorly sorted, clay- to boulder-size, locally derived material deposited principally by rotational slides and slumps; characterized by slightly to moderately subdued hummocky topography; developed on steeper slopes in Permian-Pennsylvanian strata; thickness variable.

Qmt **Talus deposits** (Holocene to Upper Pleistocene) - Very poorly sorted, angular cobbles and boulders and finer-grained interstitial sediment deposited principally by rock fall on and at the base of steep slopes; locally grades downslope to colluvial deposits; generally less than 20 feet (<6 m) thick.

Mixed-Environment Deposits

Qac **Alluvial and colluvial deposits** (Holocene to Upper Pleistocene) - Poorly to moderately sorted, generally poorly stratified, clay- to boulder-size, locally derived sediment deposited in swales, small drainages, and the upper reaches of larger ephemeral streams by fluvial, slopewash, and creep processes; generally less than 20 feet (6 m) thick.

Qla **Lacustrine and alluvial deposits** (Holocene to Upper Pleistocene) - Moderately to well-sorted, fine-grained sand, silt, and clay; grades into silt and clay deposits of the Bonneville Lake cycle; mapped in Goshen Valley; includes areas of spring and marsh deposits (Qsm) and younger lacustrine deposits (Qly) difficult to distinguish or map at target scale; thickness unknown.

Qmtc **Talus and colluvium** (Holocene to Upper Pleistocene) - Very poorly sorted, angular to subangular cobbles and boulders and finer-grained interstitial sediment, deposited principally by rock fall on steep slopes, that grades downslope into colluvial deposits; locally includes older colluvium; generally less than 20 feet (6 m) thick.

Stacked-Unit Deposits

Consist of a thin cover of deposits of the Bonneville lake cycle (first unit) overlying various bedrock or surficial deposit units (second unit).

Qlsp/Tu

Lacustrine sand and silt over Tertiary strata (Upper Pleistocene/Pliocene? or Miocene?) - One exposure in railroad cut on the south side of the hill near Payson Station of silt and sand likely of the Provo phase of Lake Bonneville overlying conglomerate; conglomerate consists of pebbles, cobbles, and boulders (to 1 foot [0.3 m]) of subrounded quartzite, dark-gray limestone, and a few igneous clasts; conglomerate matrix is very pale-orange to orange, calcareous sand and grit, locally with travertine and freshwater limestone; conglomerate with slight east dip; previously assigned to the Salt Lake Formation by Bissell (1948, 1963) and White (1953); age unknown, assumed to be post-Oligocene; up to about 3 feet (1 m) of sand and silt over conglomerate; exposed thickness of Tertiary strata about 20 feet (6 m), but total thickness is unknown.

Qlsp/Pdc

Lacustrine sand and silt over Diamond Creek Formation (Upper Pleistocene/Lower Permian) - One area near Payson Station of sand and silt, likely of the Provo phase of Lake Bonneville, overlying the Diamond Creek Formation; a small unmapped exposure of sandstone in drainage on north side of hill; sandstone is light red to very pale orange, fine grained, friable to well indurated, and cross-bedded; bedding varies from thin and medium to indistinct; age from Baker and Williams (1940) and Morris and Lovering (1961); up to about 3 feet (1 m) of sand and silt over sandstone, and exposed sandstone thickness is approximately 150 to 200 feet (45-60 m) (White, 1953); regional thickness of Diamond Creek up to about 1000 feet (300 m) (Hintze, 1962).

Ql/Qafo

Lacustrine deposits over older alluvial-fan deposits (Upper Pleistocene/Upper Pleistocene) - Veneer of fine- to coarse-grained lacustrine deposits overlying older alluvial fan deposits; shoreline features present on alluvial-fan deposits; lacustrine deposit thickness probably less than 10 feet (3 m).

Ql/Pk

Lacustrine deposits over Kirkman Formation (Upper Pleistocene/Lower Permian) - Veneer of fine- to coarse-grained lacustrine deposits overlying Kirkman Formation unit; surficial deposit thickness probably less than 20 feet (6 m).

Ql/Pfc

Lacustrine deposits over Freeman Peak and Curry Peak Formations (Upper Pleistocene/Lower Permian) - Veneer of fine- to coarse-grained lacustrine deposits overlying Freeman Peak and Curry Peak Formations; surficial deposit thickness probably less than 20 feet (6 m).

Ql/Pfp?

Lacustrine deposits over Freeman Peak Formation? (Upper Pleistocene/Lower Permian) - Veneer of fine- to coarse-grained lacustrine deposits overlying Freeman Peak Formation?; surficial deposit thickness probably less than 20 feet (6 m).

Ql/Pcp

Lacustrine deposits over Curry Peak Formation (Upper Pleistocene/Lower Permian) - Veneer of fine- to coarse-grained lacustrine deposits overlying Curry Peak Formation; surficial deposit thickness probably less than 20 feet (6 m).

Ql/Pobm

Lacustrine deposits over Bingham Mine Formation of Oquirrh Group (Upper Pleistocene/Upper Pennsylvanian) - Veneer of fine- to coarse-grained lacustrine deposits overlying Bingham Mine Formation; surficial deposit thickness probably less than 20 feet (6 m).

Ql/Pobp

Lacustrine deposits over Butterfield Peaks Formation of Oquirrh Group (Upper Pleistocene/Middle to Lower Pennsylvanian) - Veneer of fine- to coarse-grained lacustrine deposits overlying Butterfield Peaks Formation; surficial deposit thickness probably less than 20 feet (6 m).

Ql/Md, Ql/Mg, Ql/MDfp

Lacustrine deposits over Deseret Limestone, Gardison Limestone, Fitchville Formation and Pinyon Peak Limestone (Upper Pleistocene/Upper and Lower Mississippian and Upper Devonian) - Veneer of fine- to coarse-grained lacustrine deposits overlying bedrock units of Goshen Hill; surficial deposit thickness probably less than 20 feet (6 m).

Ql/Cu

Lacustrine deposits over undivided Cambrian strata (Upper Pleistocene/Cambrian) - Veneer of fine- to coarse-grained lacustrine deposits overlying undivided Cambrian strata; surficial deposit thickness probably less than 20 feet (6 m).

Ql/Pz

Lacustrine deposits over undivided Paleozoic strata (Upper Pleistocene/Paleozoic) - Veneer of fine- to coarse-grained lacustrine deposits overlying undivided Paleozoic strata; surficial deposit thickness probably less than 20 feet (6 m).

QUATERNARY-TERTIARY

QTaf **Oldest alluvial-fan deposits** (Lower Pleistocene to Pliocene) - High-level alluvial-fan deposits in two areas west of Goshen Gap; predominantly quartzite and carbonate clasts, locally with volcanic clasts; poorly sorted subangular to subrounded boulders, cobbles, and pebbles in a matrix of sand and silt (also see Elison, 1952); mapped as fanglomerate by Elison (1952) and White (1953), and Provo-level gravel by Bissell (1963); age unknown, but Bissell (1948) considered it Pleistocene (pre-Bonneville); up to about 60 feet (20 m) exposed, but total thickness unknown.

Unconformity

TERTIARY-CRETACEOUS

TKs **Tertiary-Cretaceous strata** (Paleocene? to Upper Cretaceous?) - Moderate-reddish-orange mudstone, gray to light-brown conglomerate, and light-brown limestone; conglomerate contains subangular to subrounded pebbles, cobbles, and boulders of quartzite, limestone, with small fragments of black chert; generally forms slopes with local conglomerate and limestone ledges; caps the upper part of West Mountain between Hill 6797 and West Mtn 2 triangulation station (Hill 6904); queried where uncertain designation; mapped by White (1953) as the North Horn Formation; age unknown, but may be partly equivalent to North Horn Formation of central Utah; similar strata are present in the southern Wasatch Mountains and northern Long Ridge (Hintze, 1962), and are up to about 600 feet (180 m) thick (Metter, 1955); thickness 0 to 200 feet (0-60 m) in the quadrangle.

TKsl **Limestone unit of Tertiary-Cretaceous strata** (Paleocene? to Upper Cretaceous?) - Light-brown limestone weathering to white; mapped separately where thicker and better exposed; oncolitic and algal limestone, locally with sandy and pebbly lenses; medium bedded to indistinctly bedded; forms ledges and small cliffs and weathers to rounded boulders and cobbles; mapped by White (1953) as Flagstaff Limestone; age unknown; 0 to 40 feet (0-10 m) thick.

Major Unconformity

PERMIAN

Also refer to Discussion of Permian-Pennsylvanian Strata on this plate.

Pk **Kirkman Formation** (Lower Permian [lower Leonardian to middle Wolfcampian]) - Interbedded limestone and calcareous sandstone; some limestone units include distinctive dark-gray, finely laminated, finely-crystalline limestone, weathering to medium-gray, light-gray, and grayish-yellow; laminations are commonly gray and yellow on millimeter scale and larger; limestone units also include fine calcite stringers, and are laminated to thinly bedded; other limestone units are medium-gray with thin to medium bedding; limestone locally includes black chert in irregular bands up to 1 foot (0.3 m) thick, calcite stringers, and fossils, including fusulinids, and crinoid and brachiopod fragments. Calcareous sandstone is medium-gray and very-pale-orange, weathering to light-brown or orange-brown with light-red patches, contains fine sand with calcareous cement, bedding is very thin to thick, locally well indurated and forms fractured ledges; minor dark-gray shale weathers to pale-red. Formation forms ledges and slopes; exposed in block north of Inez tear fault and in the eastern White Lake-Keigley Quarry Hills; contact with Freeman Peak Formation mapped at change from calcareous sandstone to limestone and calcareous sandstone; fusulinids indicate early Leonardian and middle Wolfcampian ages (table 1); apparent discrepancy in age and stratigraphic position (sample W-20) suggests structural complications difficult to map at 1:24,000 scale; regionally the age of the Kirkman is not well constrained and was reported as Wolfcampian (Welsh and James, 1961; Hintze, 1962), although Dunbar and others (1960) indicated an early Leonardian age at the type locality; upper part of unit in contact with Inez tear fault; exposed thickness of approximately 1000 feet (300 m) measured by H.J. Bissell (Swanson, 1952; White, 1953); regional thickness up to maximum of 1600 feet (490 m) at type section east of Springville, Utah (Baker and Williams, 1940; Hintze, 1962).

Pfc **Freeman Peak and Curry Peak Formations, undivided** (Lower Permian [middle and lower Wolfcampian]) - Combined where separation of formations is unclear due to similar lithologies and lack of paleontologic data; mapped on north side of Inez tear fault; exposed thickness estimated at 2000 feet (600 m).

Pfp **Freeman Peak Formation** (Lower Permian [middle to lower? Wolfcampian]) - Calcareous sandstone, lesser quartzite, and minor limestone; medium-gray to very-pale-orange calcareous sandstone weathering to light-brown and yellowish-gray with light-red patches, contains fine sand with calcareous cement, fractured where better induration; pale-orange quartzite; sparse medium-gray limestone interbeds; very thinly to thickly bedded; exposed with Kirkman Formation near White Lake Hills thrust fault, and also exposed with underlying Curry Peak Formation? (see map unit Pfc) and overlying Kirkman Formation in block north of Inez tear fault; forms ledges and slopes; contact with underlying Curry Peak Formation not mapped (see Pfc); age based on fusulinids (table 1); exposed thickness uncertain (see Pfc); formation thickness of 2000 to 2450 feet (600-750 m) reported in the Oquirrh Mountains (Welsh and James, 1961; Swenson, 1975).

Pcp **Curry Peak Formation** (Lower Permian [middle? to lower Wolfcampian]) - Calcareous sandstone, lesser limestone, and minor sandy shale; medium-gray to very-pale-orange calcareous sandstone weathers to moderate-yellowish-brown, brown, and yellowish-gray with light-red patches; contains fine sand with calcareous matrix; locally cross-bedded, where sandstone is more indurated it forms fractured ledges and weathers to darker orange-brown; dark- to medium-gray limestone interbeds, limestone intervals generally 3 feet (1 m) or less thick, locally with fusulinids, brachiopods and other fossil fragments, calcite stringers, and sandy intervals; also minor, chippy, dark-gray sandy shale; very thin to thick bedded; exposed on lower east flank and southwest side of West Mountain north of Inez tear fault; forms ledges and slopes; queried where uncertain designation; contact with underlying Bingham Mine Formation located with the aid of fossils; conodonts and fusulinids in these beds at West Mountain include several species ranging from middle? to early Wolfcampian (table 1); base appears to be locally exposed on east flank of range above West Mountain thrust fault and southwest of West Mtn 2 triangulation station (Hill 6904); maximum exposed thickness of 1500 feet (500 m); formation thickness of 2450 to 2800 feet (750-850 m) in the Oquirrh Mountains (Welsh and James, 1961; Swenson, 1975).

Unconformity?

PENNSYLVANIAN-MISSISSIPPIAN

Also refer to Discussion of Permian-Pennsylvanian Strata on this plate.

IPo Oquirrh Group, undivided - shown on cross section only.

IPobm **Bingham Mine Formation** (Upper Pennsylvanian [Virgilian to Missourian]) - Calcareous sandstone with minor limestone, quartz sandstone and shale and including a limestone marker unit (IPoml); medium-gray to light-brown calcareous sandstone weathering to light-brown, light-gray, grayish-orange with light-red patches, very thin to thickly bedded, fine sand in calcareous matrix; medium-gray limestone interbeds; white quartz sandstone weath-

ers to light-brown; dark-gray to light-brown sandy shale; basal part of unit (~300 feet [100 m]) also includes dark-gray limestone weathering to medium-gray, friable light- to moderate-red sandstone, and few thin orthoquartzite beds; unit forms ledges and ledgey slopes; crops out on eastern upper flank and southwestern upper flank of West Mountain; early Virgilian fusulinids (table 1) obtained from uppermost part of limestone marker unit (map unit IPoml), and Nolan (1950) assigned a Missourian age to lower part of the formation; contact with underlying Butterfield Peaks Formation mapped at top of relatively thick quartzite interval, not substantiated with fossil age; Jordan and Commercial limestone units marking the base of the formation in the Oquirrh Mountains (Welsh and James, 1961) do not appear to be present on West Mountain; on West Mountain, Nolan (1950) measured 2780 feet (850 m) of Missourian? strata and some Virgilian strata but did not recognize thrust fault contacts with Permian rocks; formation thickness of approximately 4000 feet (1200 m) determined from cross section; thicknesses of 5300 feet (1600 m), 6500 feet (2000 m) and 7311 feet (2229 m) reported by Swenson (1975), Welsh and James (1961) and Tooker and Roberts (1970), respectively, in the Oquirrh Mountains.

IPoml **Limestone marker unit of Bingham Mine Formation** (lower Virgilian) - Medium-light-gray to medium-gray limestone locally grading to medium-gray and light-brown calcareous sandstone; thinly to indistinctly bedded; limestone is finely crystalline with calcite stringers, sandy laminae, irregular black chert lenses to 1 inch (3 cm) thick, and fossil fragments (brachiopod, fusulinid); ledge- to cliff-forming unit; early Virgilian fusulinids (table 1) from near top of unit; exposed thickness up to 100 feet (30 m).

Unconformity?

IPobp **Butterfield Peaks Formation** (Middle to Lower Pennsylvanian [Desmoinesian-Atokan]) - Repetitively interbedded sequence of calcareous sandstone, quartzite, and limestone; limestone abundance decreases upsection, quartzite interval caps formation (Nolan [1950] reported as 620 feet [190 m] thick); medium-gray to light-brown calcareous sandstone weathering to very-pale-orange and light-gray, with fine to medium grains in calcareous matrix; very-pale-orange to grayish-orange and white quartzite often cross-bedded and fractured; dark-gray to medium-gray limestone locally with irregular lenses and spherical black chert that weathers to grayish-orange, locally fossiliferous with brachiopods, bryozoans, crinoids, and fusulinids, and with calcite in stringers and small masses; very thin to thick bedded; forms ledges and slopes along the west flank and crest of West Mountain; Nolan (1950) reported fusulinids including *Fusulina* (Desmoinesian) and *Fusulinella* (Desmoinesian-Atokan) from about the lower 3500 feet (1100 m) of section exposed on the west flank of West Mountain, whereas Desmoinesian conodonts obtained from a similar interval include *Idiognathodus* sp. and *Neognathodus* sp. (table 1); no *Chaetetes* coral bed was observed near the west base of the range as reported by White (1953); lower portion of unit (Atokan?) and base not exposed; exposed thickness of approximately 7300 feet (2200 m) (Nolan, 1950; White, 1953); Biek (2004) reported an incomplete thickness of up to 4500 feet (1370 m) in the northern Lake Mountains, while Tooker and Roberts (1970) stated the formation is 9070 feet (2770 m) thick in the Oquirrh Mountains.

IPobl **Limestone marker unit of Butterfield Peaks Formation** (Desmoinesian) - Medium-dark-gray limestone; fine grained, thin to medium bedded, generally with characteristic spherical black chert, 1 inch (3 cm) or less in diameter in selected beds, but locally absent to north; chert also occurs as irregular masses and nodules that weather to orange-brown; forms ledges and saddles; samples W-5 and W-6 yielded *Idiognathodus* sp. conodonts (Desmoinesian) (table 1); appears to be uppermost limestone unit with spherical black chert at West Mountain; ranges from about 40 to 100 feet (12-30 m) thick.

IPowc West Canyon Limestone (Lower Pennsylvanian [Morrowan] to Upper Mississippian) - not exposed.

MISSISSIPPIAN

Mmc Manning Canyon Shale (Upper Mississippian) - not exposed.

Inez tear fault

Unit descriptions for Mississippian, Devonian, and Cambrian rocks modified from Elison (1952), Schindler (1952), Swanson (1952), White (1953), and John Welsh (unpublished data, 1978). The lower hills between the Inez tear fault and State Route 141 are herein referred to as the White Lake-Keigley Quarry Hills, although not indicated as such on the topographic base map. Goshen Hill is located south of State Route 141.

Mgb **Great Blue Formation, undivided** (Upper Mississippian) - Dark-gray limestone weathers to medium-bluish-gray and medium-gray; some slope-forming sandstone and shale in lower part; limestone is fine to medium crystalline, locally cherty and with calcite stringers, and locally fossiliferous with brachipods and bryozoans; thin to very thick bedded; crops out on the east side of the White Lake-Keigley Quarry Hills; forms ledges and some small cliffs; contact with Humbug Formation based on change from sandstone and limestone to primarily limestone of Great Blue Formation; age from Gordon and others (2000); Gordon and others (2000) discussed a three-member separation of the Great Blue Limestone in the Oquirrh Mountains, while Morris and Lovering (1961) separated the Great Blue Formation into four members in the East Tintic Mountains, but no member separation could be mapped in the quadrangle; regionally the formation is about 2500 feet (800 m) thick (Morris and Lovering, 1961; Gordon and others, 2000); top not exposed in quadrangle, and exposed thickness of approximately 1200 feet (400 m) has been affected by structural complications (Elison, 1952; Schindler, 1952; Swanson, 1952; White, 1953).

Mh **Humbug Formation** (Upper Mississippian) - Alternating intervals of light- to blue-gray limestone and very-pale-orange and light-brown sandstone and quartzite; limestone is fine to medium grained, crinoidal, with lesser light-gray, finely crystalline, and silty dolomite; sandstone is dolomitic near base, fine to medium grained, with well sorted and rounded grains; thin to medium bedded; present in White Lake-Keigley Quarry Hills and Goshen Hill; forms ledges and slopes; lower contact marked by change from limestone (Deseret) to sandstone and limestone; age from Morris and Lovering (1961); measured thickness of 785 feet (240 m) in White Lake-Keigley Quarry Hills (Elison, 1952; Schindler, 1952; Swanson, 1952; White, 1953).

Md **Deseret Limestone** (Upper Mississippian) - Light- to dark-gray-blue and dark-gray limestone and lesser light-gray to medium-gray dolomite; limestone is micritic to coarse grained, with chert in lower portions as nodules, bands, and beds; some black chert bands up to 1 foot (0.3 m) thick; fossiliferous limestone in upper half includes crinoids, and few *Trilophyllites* corals, brachiopods, and *Lithostrotion* corals; limestone thin to medium bedded, upper part is indistinctly bedded; dolomite is coarse grained, crinoidal, and locally cherty; thin basal Delle Phosphatic Shale Member is not obvious and may be largely covered; crops out in White Lake-Keigley Quarry Hills and Goshen Hill; forms primarily ledges with some slopes; lower contact corresponds to a change from cherty fossiliferous limestone and dolomite (Gardison) to unfossilierous limestone of the Deseret; age from Morris and Lovering (1961) and Sandberg and Gutschick (1984); prior mapping reported thickness of 832 feet (254 m) (Elison, 1952; Schindler, 1952; Swanson, 1952), while thickness of 765 feet (235 m) measured by John Welsh (unpublished data, 1978); previously mapped as the Pine Canyon limestone (Elison, 1952; Schindler, 1952; Swanson, 1952; White, 1953).

Mg **Gardison Limestone** (Lower Mississippian) - Cherty limestone, fossiliferous limestone, and dolomite; upper part (140 feet [40 m]) is dark-blue-gray to blue-gray cherty limestone, dolomitic at top, fine to medium grained, bioclastic, crinoidal, and containing *Trilophyllites* corals; chert found in layers (10%) of dark-gray weathering to tan, grading to 1 to 2 inch (0.4-1 cm) black chert bands; middle part (190 feet [60 m]) is medium- to light-gray dolomite with recrystallized bioclastic and crinoidal clasts, and *Syringopora* corals near top, underlain by light-gray dolomite that is medium crystalline and unfossiliferous, medium-bedded; lower part (290 feet [90 m]) is blue-gray to dark-gray limestone and gray dolomite underlain by light- to dark-gray-blue fossiliferous limestone, with a fine-grained matrix with varying coarse-grained clasts; fossils include spirifers, gastropods, small productids, few *Triplophyllites* and horn corals, and crinoid columnals; also with tight non-porous, graded beds from coarse grained to very fine grained; forms ledges and slopes; lower contact with Fitchville based on change from dolomite and limestone to fossiliferous limestone of the Gardison; age from Morris and Lovering (1961); thickness of 620 feet (190 m) measured by John Welsh (unpublished data, 1978); previously mapped with Fitchville strata as the Gardner dolomite (Elison, 1952; Schindler, 1952; Swanson, 1952; White, 1953).

MISSISSIPPIAN - DEVONIAN

MDfp **Fitchville Formation and Pinyon Peak Limestone, undivided** (Lower Mississippian and Upper Devonian): **Fitchville** - light-gray-blue limestone and light-gray dolomite; limestone is thin bedded with crinoids, small productid brachiopods, and *Triplophyllites* corals; dolomite is medium bedded with crystalline laminae, and contains fossil *Syringopora*, horn corals, and silicified brachiopods; 2-foot-thick [0.6 m] tan, bedded chert at base; **Pinyon Peak** - medium-gray to dark-gray dolomite weathering blue-gray; poorly bedded to massive; fossils include crinoids and gastropods, with silicified corals at base of unit; Pinyon Peak thickness of 129 feet (39 m) measured in the White Lake-Keigley Quarry Hills (Elison, 1952; Schindler, 1952; Swanson, 1952). Fitchville and Pinyon Peak also exposed on Goshen Hill; combined unit forms ledges and slopes; the Fitchville was not previously mapped at West Mountain, and the lower portion of the former Gardner is here assigned to the Fitchville, considering that it has been mapped in this region (Biek, 2004), and John Welsh included the Fitchville and Pinyon Peak

in his measured section at the White Lake-Keigley Quarry Hills area; contact with underlying Cambrian formation characterized by an unconformity; age from Morris and Lovering (1961); thicknesses of 170 feet (50 m) (Fitchville) and 130 feet (40 m) (Pinyon Peak) totaling 300 feet (90 m) measured by John Welsh (unpublished data, 1978); from 370 to 425 feet (110-130 m) of these combined formations are reported in the East Tintic Mountains (Morris and Lovering, 1979).

Major unconformity

CAMBRIAN

Co **Opex Formation?** (Upper Cambrian) - Light-gray, finely crystalline, medium-bedded, ledge-forming dolomite; exposed in White Lake-Keigley Quarry Hills area; queried in exposures immediately south of Inez tear fault that appear to be affected by structural attenuation, where a relatively thin dolomite interval between Cole Canyon Dolomite and Gardison Limestone may include part of Fitchville-Pinyon Peak; lower contact marked by change to laminated and mottled, less resistant dolomite of the Cole Canyon; age unknown but assumed to be Upper Cambrian based on correlation with Opex Formation of East Tintic Mountains (see Morris and Lovering, 1961), although the dolomite lithology is atypical for Opex there; thickness of 220 to 472+ feet (65-144+ m) in the White Lake-Keigley Quarry Hills (Elison, 1952; Schindler, 1952; Swanson, 1952, White, 1953); Opex thickness of 140 to 250 feet (40-80 m) in East Tintic Mountains (Morris and Lovering, 1961).

Cc **Cole Canyon Dolomite** (Middle Cambrian) - Alternating light-gray and blue-gray to medium-gray dolomite; in general, lighter beds are finely laminated and darker beds are mottled; dense to finely crystalline in medium to thick beds; a few units contain twiggy bodies (small rods of calcite and dolomite); lower contact based on change to lack of layered appearance and presence of twiggy bodies of the Bluebird Dolomite; age from Morris and Lovering (1961); measured thickness of 287 feet (88 m) in White Lake Hills and 495 feet (151 m) in Keigley Quarry (Elison, 1952; Schindler, 1952; Swanson, 1952; White, 1953); including Opex? strata with the Cole Canyon would bring the formation thickness range to 507 to 967+ feet (155-295+ m), which is closer to the 830 to 900 feet (250-275 m) reported for the Cole Canyon Dolomite in the East Tintic Mountains by Morris and Lovering (1961).

Cb **Bluebird Dolomite** (Middle Cambrian) - Medium-gray dolomite weathers to light-gray; dolomite includes abundant white twiggy bodies; fine to medium crystalline, medium to thick bedded, prominent ledge-forming unit; lower contact corresponds to change from limestone (Herkimer) to dolomite; age from Morris and Lovering (1961); measured thickness of 198 feet (60 m) in White Lake Hills and 305 feet (93 m) in Keigley Quarry (Elison, 1952; Schindler, 1952; Swanson, 1952; White, 1953); East Tintic Mountains area thickness of 150 to 200 feet (50-60 m) (Morris and Lovering, 1961); the Bluebird Dolomite was one of the two main rock formations formerly quarried at Keigley and processed by Columbia-Geneva Steel (Bryce Tripp, Utah Geological Survey, verbal communication, 2006).

Ch **Herkimer Limestone** (Middle Cambrian) - Blue limestone and blue-gray to dark-blue-gray dolomite; upper half of thin- to medium-bedded limestone includes discontinuous yellow-brown bands of argillaceous material; lower half of dolomite that weathers to light gray to red brown and is locally mottled (light and dark gray), medium- to thick-bedded, with twiggy bodies and pisolites; forms slopes and ledges; lower contact based on change to dolomite; age from Morris and Lovering (1961); measured thickness of 339 feet (103 m) in White Lake Hills, and 324 to 336 feet (99-102 m) in Keigley Quarry (Elison, 1952; Schindler, 1952; Swanson, 1952; White, 1953); thickness in the East Tintic Mountains is 350 to 430+ feet (110-130+ m) (Morris and Lovering, 1961).

Cd **Dagmar Dolomit**e (Middle Cambrian) - Light-gray to blue-gray to medium-gray dolomite, weathers to light gray-brown; finely crystalline, finely laminated, and exhibits a blocky fracture; a key marker unit in the Cambrian section due to relatively distinctive lithology; forms small ledges and slopes; age from Morris and Lovering (1961); 57 feet (17 m) measured in White Lake Hills, and from 31 to 52 feet (9-16 m) in Keigley Quarry (Elison, 1952; Schindler, 1952; Swanson, 1952; White, 1953); 60-100 feet (20-30 m) thick in the East Tintic Mountains (Morris and Lovering, 1961).

Cte **Teutonic Limestone** (Middle Cambrian) - Blue-gray and medium- to dark-gray, thin- to thick-bedded limestone that includes orange-gray to orange-brown argillaceous material in discontinuous bands and stripes; pisolitic and oolitic beds abundant in lower part of unit, which includes thin bed of flat-pebble conglomerate about 80 feet (20 m) above base; ledge- to cliff-former; queried where uncertain designation; lower contact marked by change to

shale of the Ophir Formation; age from Morris and Lovering (1961); thickness of 360 feet (110 m) measured in the northwest part of Keigley Quarry (Elison, 1952; Schindler, 1952; Swanson, 1952; White, 1953); thickness of 420 feet (130 m) in the East Tintic Mountains (Morris and Lovering, 1961); formerly quarried at Keigley and processed for use as a flux in the steel industry (Bryce Tripp, Utah Geological Survey, verbal communication, 2006).

Cop **Ophir Formation** (Middle Cambrian) - Primarily olive-green shale with a medial limestone; upper portion (48 feet [15 m]) is micaceous, calcareous, sandy shale; dark-gray medial limestone (86 feet [26 m]), weathering to blue-gray, is pisolitic and oolitic, and characterized by discontinuous bands of yellow-brown argillaceous material; lower portion (170 feet [50 m]) is slightly calcareous, micaceous shale with lenses of sandstone and sandy shale, and 5-foot-thick (2 m) gray to green quartzite bed near base of unit; fragments of trilobites and brachiopods present in some shale horizons; exposed adjacent to the Inez tear fault and at the Keigley Quarry area; somewhat gradational contact with resistant Tintic below; age from Morris and Lovering (1961); measured thickness of 307 feet (94 m) at Keigley Quarry (Elison, 1952; Schindler, 1952; Swanson, 1952; White, 1953); East Tintic area thickness of 275 to 430 feet (85-130 m) (Morris and Lovering, 1961).

Ct **Tintic Quartzite** (Lower Cambrian) - White to light-pink quartzite weathering to dark-yellowish-orange; medium-bedded quartzite is fine- to medium-grained, with common cross-bedding, includes some small beds or lenses of quartz-pebble conglomerate, and somewhat micaceous toward top of formation; forms ledges, cliffs, and boulder-strewn outcrops; crops out in the White Lake-Keigley Quarry Hills; age from Morris and Lovering (1961); base not exposed, exposed thickness up to 700 feet (200 m) (Elison, 1952; Schindler, 1952; Swanson, 1952; White, 1953); thickness in the East Tintics of 2300 to 3200 feet (700-1000 m) (Morris and Lovering, 1961).

Pz Paleozoic strata, undivided - Shown on cross section only.

ACKNOWLEDGMENTS

The original detailed stratigraphic studies and geologic mapping of the area was conducted by Dr. H.J. Bissell and several graduate students at Brigham Young University (Nolan, Elison, Schindler, Swanson, White) in the late 1940s and early 1950s. Dr. Lehi Hintze compiled the mapping of the southern Wasatch Mountains region in 1962.

The late Dr. Paul Proctor (Brigham Young University) contracted with the UGS to map the West Mountain and adjacent Lincoln Point quadrangles in the mid 1980s. He along with Wenxia Wang (temporary adjunct research associate professor at BYU) conducted preliminary field work that was not completed, as Paul subsequently fell into ill health. Dr. Proctor's field maps and notes were provided to UGS in 1999 after his death. I acknowledge his efforts and improvements to the understanding of the geology of this region.

I also extend thanks to the late Dr. John Welsh who generously donated many years of unpublished geologic research to the UGS in 1998 prior to his untimely death. Dr. Welsh conducted important work on the Permian, Pennsylvanian and Mississippian strata, and measured numerous sections of Paleozoic strata in northern and central Utah, one of which is in the White Lake-Keigley Quarry Hills area of the West Mountain quadrangle.

Bob Biek (UGS) provided suggestions and expertise on mapping of Permian-Pennsylvanian strata. Kent Brown (UGS) set up the digital photogrammetry. I thank Dr. Scott Ritter (Brigham Young University) and A.J. Wells (independent-Exxon retired), for paleontologic expertise identifying conodonts and fusulinids from Permian-Pennsylvanian strata, respectively. The City of Payson provided access to their landfill and quarry property, while Staker-Parson Companies provided access to the Kiegley Quarry, and Condie Construction Company allowed access to the Condie gravel pit. Staker-Parson also provided access to Geneva Steel geologic information on Keigley Quarry.

UGS staff Bob Biek, Grant Willis, and Robert Ressetar improved this map and materials through careful reviews.

REFERENCES

Baker, A.A., and Williams, J.S., 1940, Permian in parts of Rocky Mountain and Colorado Plateau regions: American Association of Petroleum Geologists Bulletin, v. 24, no. 4, p. 617-635.

Biek, R.F., 2004, Geologic maps of the Saratoga Springs and Cedar Fort 7.5' quadrangles, Utah County, Utah: Utah Geological Survey Maps 201 and 202, 3 plates, scale 1:24,000.

Bissell, H.J., 1948, Pleistocene sedimentation in southern Utah Valley, Utah: Ames, Iowa State University, Ph.D. Dissertation.

—1963, Lake Bonneville-geology of southern Utah Valley: U.S. Geological Survey Professional Paper 257-B, 130 p., 1 plate, scale 1:48,000.

Brimhall, W.H., Bassett, I.G., and Merritt, L.B., 1976, Reconnaissance study of deep-water springs and strata of Utah Lake: Provo, Utah, Mountainlands Association of Governments, Technical Report 3, 21 p.

Crittenden, M.D., Jr., 1963, New data on the isostatic deformation of Lake Bonneville: U.S. Geological Survey Professional Paper 454-E, 31 p.

Currey, D.R., 1982, Lake Bonneville: Selected features of relevance to neotectonic analysis: U.S. Geological Survey Open-File Report 82-1070, 30 p., 1 plate, scale 1:500,000.

Currey, D.R., and Oviatt, C.G., 1985, Durations, average rates, and probable causes of Lake Bonneville expansions, stillstands, and contractions during the last deep-lake cycle, 32,000 to 10,000 years ago, *in* Kay, P.A., and Diaz, H.F., editors, Problems of and prospects for predicting Great Salt Lake levels - Proceedings of a NOAA conference, March 26-28, 1985: Salt Lake City, University of Utah, Center for Public Affairs and Administration, p. 9-24.

Dunbar, C.O., and others, 1960, Correlation of Permian formations of North America: Geological Society of America Bulletin, v. 71, p. 1763-1806.

Elison, J.H., 1952, Geology of the Keigley quarries and the Genola Hills area, Utah: Provo, Brigham Young University, M.S. thesis, 76 p., 3 plates, scale 1:12,000.

Gordon, M., Jr., Tooker, E.W., and Dutro, J.T., Jr., 2000, Type locality for the Great Blue Limestone in the Bingham nappe, Oquirrh Mountains, Utah: U.S. Geological Survey Open-File Report 00-012, 61 p.

Hintze, L.F., 1988, Geologic history of Utah: Brigham Young University Geology Studies Special Publication 7, 203 p., reprinted with minor revisions July 1993.

Hintze, L.F., compiler, 1962, Geology of the southern Wasatch Mountains and vicinity - A symposium: Brigham Young University Geology Studies, v. 9, part 1, 104 p., map scale 1:125,000.

Laes, D.Y.M., Krahulec, K.A., and Ballantyne, G.H., compilers, 1997, Geologic map of the Oquirrh Mountains, *in* John, D.A., and Ballantyne, G.H., editors, Geology and ore deposits of the Oquirrh and Wasatch Mountains, Utah: Guidebook 29 prepared for Society of Economic Geologists Field Trip 23-25 October 1997, 256 p., plate 1 map scale 1:62,500.

Larson, J.A., 1977, Trace fossils, resedimented carbonates, and conodonts of the Wolfcampian portion of the eastern Oquirrh Formation, Utah: Madison, University of Wisconsin, Ph.D. dissertation, 196 p.

Larson, J.A., and Clark, D.L., 1978, Lower Permian (Sakmarian) portion of the Oquirrh Formation, Utah: Geological Society of America, Rocky Mountain Section, Field Trip 10 guide, 49 p.

Metter, R.E., 1955, Geology of the northern part of the southern Wasatch Mountains, Utah: Columbus, The Ohio State University, Ph.D. dissertation, 262 p., 2 plates, scale 1:24,000.

Morris, H.T., Douglass, R.C., and Kopf, R.W., 1977, Stratigraphy and microfaunas of the Oquirrh Group in the southern East Tintic Mountains, Utah: U.S. Geological Survey Professional Paper 1025, 22 p.

Morris, H.T., and Lovering, T.S., 1961, Stratigraphy of the East Tintic Mountains, Utah: U.S. Geological Survey Professional Paper 361, 145 p.

—1979, General geology and mines of the East Tintic mining district, Utah and Juab Counties, Utah: U.S. Geological Survey Professional Paper 1024, 203 p.

Nolan, G.M., 1950, Sedimentation of the Oquirrh Formation, West Mountain, Utah: Provo, Brigham Young University, M.S. thesis, 39 p.

Sandberg, C.A., and Gutschick, R.C., 1984, Distribution, microfauna, and source-rock potential of Mississippian Delle Phosphatic Member of the Woodman Formation and equivalents, Utah and adjacent states, *in* Woodward, J., Meissner, F.F., and Clayton, J.L., editors, Hydrocarbon source rocks of the greater Rocky Mountain region: Rocky Mountain Association of Geologists Field Conference Guidebook, p. 135-178.

Schindler, S.F., 1952, Geology of the White Lake Hills, Utah: Provo, Brigham Young University, M.S. thesis, 66 p., 2 plates, scale 1:12,000.

Swanson, J.W., 1952, Geology of the southern portion of West Mountain, Utah: Provo, Brigham Young University, M.S. thesis, 69 p., 3 plates, scale 1:12,000.

Swenson, A.J., 1975, Sedimentary and igneous rocks of the Bingham mining district, in Bray, R.E., and Wilson, J.C., editors, Guidebook to the Bingham mining district: Society of Economic Geologists and Kennecott Copper Corporation, Bingham Canyon, Utah, p. 21-39.

Tooker, E.W., and Roberts, R.J., 1970, Upper Paleozoic rocks in the Oquirrh Mountains and Bingham mining district, Utah, with a sec-

tion on biostratigraphy and correlation by Gordon, M., Jr., and Duncan, H.M.: U.S. Geological Survey Professional Paper 629-A, 76 p.

Welsh, J.E., and Bissell, H.J., 1979, The Mississippian and Pennsylvanian (Carboniferous) Systems in the United States: U.S. Geological Survey Professional Paper 1110-Y, 35 p.

Welsh, J.E., and James, A.H., 1961, Pennsylvanian and Permian stratigraphy of the central Oquirrh Mountains, Utah, *in* Cook, D.R., editor, Geology of the Bingham mining district and northern Oquirrh Mountains: Utah Geological Society Guidebook to the geology of Utah, no. 16, p. 1-16.

White, B.O., 1953, Geology of West Mountain and northern portion of Long Ridge, Utah County, Utah: Provo, Brigham Young University, M.S. thesis, 188 p., 3 plates, scale 1:12,000.

ADDITIONAL REFERENCES

Additional references pertaining to regional structure and mapping.

Brady, M.J., 1965, Thrusting in the southern Wasatch Mountains, Utah: Brigham Young University Geology Studies, v. 12, p. 3-53.

Cook, K.L., and Berg, J.W., Jr., 1961, Regional gravity survey along the central and southern Wasatch Front, Utah: U.S. Geological Survey Professional Paper 316-E, 89 p.

Cook, K.L., Edgerton, D.A., Serpa, L.F., and DePangher, M., 1997, Complete bouguer gravity anomaly map and geological interpretation of the southern Wasatch Front, Utah: Utah Geological and Mineral Survey Contract Report 97-1, 20 p., 1 plate, scale 1:100,000.

Davis, D.A., and Cook, K.L., 1983, Evaluation of low-temperature geothermal potential in Utah and Goshen Valleys and adjacent areas, Utah: Utah Geological and Mineral Survey Report of Investigation No. 179, Part I - Gravity survey 1983, 138 p., 2 plates, scale 1:100,000.

Machette, M.N., 1992, Surficial geologic map of the Wasatch fault zone, eastern part of Utah Valley, Utah County, and parts of Salt Lake and Juab Counties, Utah: U.S. Geological Survey Miscellaneous Investigations Series Map I-2095, 1 plate, scale 1:50,000.

Morris, H.T., 1987, Preliminary geologic structure map of the Delta 2 degree quadrangle and adjacent areas, west-central Utah: U.S.Geological Survey Open-File Report 87-187, scale 1:250,000.

Morris, H.T., and Shepard, W.M., 1964, Evidence for a concealed tear fault with large displacement in the east central Tintic Mountains, Utah: U.S. Geological Survey Professional Paper 501-C, p. C19-C21.

Zoback, M.L., 1983, Structure and Cenozoic tectonism along the Wasatch fault zone, Utah: in Miller, D.M., Todd, V.R., Howard, K.A., and Crittenden, M.D., editors, Tectonic and Stratigraphic Studies in the eastern Great Basin: Geological Society of America Memoir 157, p. 3-27.

Text Box Plate 2

DISCUSSION OF PERMIAN-PENNSYLVANIAN STRATA

The majority of West Mountain is composed of Permian-Pennsylvanian strata previously mapped as the Oquirrh Formation (Permian-Pennsylvanian) and overlying Kirkman Limestone (Permian). Nolan (1950) conducted a stratigraphic study of the Oquirrh Formation on the central part of West Mountain. Swanson (1952) and White (1953) mapped the Oquirrh Formation on West Mountain as one map unit with little internal structure, and reported a total Oquirrh thickness of 16,200 feet (4900 m). This total thickness includes 11,450 feet (3490 m) attributed to Nolan, an additional 350 feet (110 m) of underlying strata (White, 1953), and an additional 4400 feet (1300 m) of overlying strata attributed to Swanson (White, 1953). Nolan's section was measured across the central portion of the range in sections 33 and 34, T. 8 S., R. 1 W. (stated as Wilsons and Long Trail Canyons); Nolan reported a total measurement of 11,040 feet (3370 m) (1950, p. 11, plate IV), but plate III indicates 11,450 feet (3490 m). Swanson (1952) reportedly measured 5000 feet (1500 m) of section (overlapping Nolan's section by about 600 feet [200 m]), but the location or basis for this measurement was not stated in his thesis. These studies reported the Oquirrh Formation ranged from Lower Permian (Wolfcampian) to Lower Pennsylvanian (Atokan) (Nolan, 1950; Swanson, 1952; White, 1953). Swanson and White reported that 1000 feet (300 m) of Kirkman Limestone overlay the Oquirrh Formation. The present mapping indicates a thickness of Permian-Pennsylvanian strata (below the Kirkman Formation) of approximately 13,000 feet (4000 m), ranging from Wolfcampian to Desmoinesian. The disparity in thickness estimates is due to the further delineation of structure at West Mountain.

Larson (1977) and Larson and Clark (1978) measured a stratigraphic section of uppermost Pennsylvanian (Virgilian) and Lower Permian (Sakmarian) strata attributed to the Oquirrh Formation on West Mountain totaling 5209 feet (1588 m). They identified conodont and fusulinid assemblages, and discussed depositional environments.

Terminology and subdivision of the Pennsylvanian Oquirrh Formation/Group and associated Permian strata varies by thrust plate and region (see Welsh and James, 1961; Tooker and Roberts, 1970; Swenson, 1975; Morris and others, 1977; Welsh and Bissell, 1979; Hintze, 1988). The Oquirrh Formation/Group has formally been restricted to Pennsylvanian strata (Welsh and James, 1961; Tooker and Roberts, 1970); however, Kennecott-Bingham Mine geologists informally include both the Permian (Freeman Peak and Curry Peak) and Pennsylvanian formations (Bingham Mine, Butterfield Peaks, and West Canyon Limestone) under the Oquirrh Group (see Hintze, 1988; Laes and others, 1997).

Table 1. Fossil identification and age data from West Mountain quadrangle.

Sample No.	Map Unit	Rock Type	Latitude (N)	Longitude (W)	Fossil ID	Fossil Type	Fauna	Preservation & Abrasion	Calcareous Algae Present	Age
W-20	Pk	Biosparite: Packstone	40°02'32.8"	111°49'34.8"	A.J. Wells	fusulinids	*Parafusulina, Schwagerina*	fair	yes	Leonardian early
W-21	Pk	Biomicrite: Wackestone	40°02'15.5"	111°49'35.8"	A.J. Wells	fusulinids	*Schwagerina*	fair	yes	Wolfcampian middle to late middle
W-30	Pk	Biosparite: Packstone	40°02'23.3"	111°49'38.4"	A.J. Wells	fusulinids	*Schwagerina, Pseudoschwagerina*	fair	none	Wolfcampian middle
W-26	Pfc	Biomicrite: Wackstone	40°02'05.0"	111°49'46.7"	A.J. Wells	fusulinids	*Schwagerina*	fair	none	Wolfcampian middle
W-19	Pfc	Biomicrite: Packstone	40°02'32.5"	111°50'01.5"	A.J. Wells	fusulinids	*Schwagerina* cf. *S. neolata, Pseudoschwagerina* ?	good	yes	Wolfcampian middle
W-29	Pfc	Biomicrite: Wackestone-Packstone	40°02'10.1"	111°49'55.1"	A.J. Wells	fusulinids	*Schwagerina*	fair	none	Wolfcampian late early
W-2	Pcp	Biomicrite: Wackestone	40°04'51.6"	111°48'49.9"	A.J. Wells	fusulinids	*Triticites* , *T.* cf. *creekensis*	fair	none	Wolfcampian early
W-9	Pcp	Sandstone	40°03'27.7"	111°48' 58.2"	A.J. Wells	fusulinids	*Triticites, Schwagerina*	fair/poor	none	Wolfcampian early
W-13	Pcp	Biomicrite: Wackestone-Packstone	40°05'22.8"	111°48'42.2"	A.J. Wells	fusulinids	*Triticites* , *T.* cf. *creekensis, Dunbarinella* sp. D1	fair	traces	Wolfcampian early
W-13	Pcp	Skeletal packstone	40°05'05.0"	111°48'44.2"	S.M. Ritter	conodonts	*Streptognathodus* aff. *cristellaris*			earliest Permian
W-15	Pcp	Biomicrite: Wackestone-Packstone	40°03'09.5"	111°49'55.5"	A.J. Wells	fusulinids	*Triticites* cf. *T. cellamagnus*	fair	yes	Wolfcampian early
W-23	Pcp	Biomicrite: Packstone	40°02'07.3"	111°50'02.3"	A.J. Wells	fusulinids	*Schwagerina*	fair	none	Wolfcampian early
W-24	Pcp	Biosparite: Packstone	40°05'07.5"	111°48'25.8"	A.J. Wells	fusulinids	*Schwagerina*	fair/poor	yes	Wolfcampian early
W-25	Pcp	Biomicrite: Wackestone	40°04'50.6"	111°48'37.9"	A.J. Wells	fusulinids	*Schwagerina*	poor	none	Wolfcampian early
W-10	IPoml	Biomicrite: Wackestone	40°03'35.8"	111°49'18.9"	A.J. Wells	fusulinids	*Triticites cullomensis*	fair	none	Virgilian early
W-16	IPobm	Crinoid/fusulinid packstone	40°03'11.3"	111°49'54.1"	S.M. Ritter	condonts/fusulinids	*Streptognathodus pawhuskaensis* , *Triticites* sp.	-	-	Virgilian (Gzhelian)
W-6	IPobl	Limestone	40°05'06.9"	111°50'02.7"	S.M. Ritter	conodonts	*Idiognathodus* sp. (juvenile)	-	-	Desmoinesian (Moscovian)
W-5	IPobp	Limestone	40°05'06.9"	111°50'02.7"	S.M. Ritter	conodonts	*Idiognathodus* sp.	-	-	Desmoinesian (Moscovian)
W-4	IPobp	Limestone	40°05'11.8"	111°50'18.8"	S.M. Ritter	conodonts	*Idiognathodus* sp., *Neognathodus* sp.	-	-	Desmoinesian (Moscovian)
W-7	IPobp	Limestone	40°04'59.5"	111°50'37.8"	S.M. Ritter	conodonts	*Idiognathodus* sp. (juvenile)	-	-	Desmoinesian (Moscovian)

Note: Location data based on NAD27.

CORRELATION OF SURFICIAL DEPOSITS
WEST MOUNTAIN QUADRANGLE

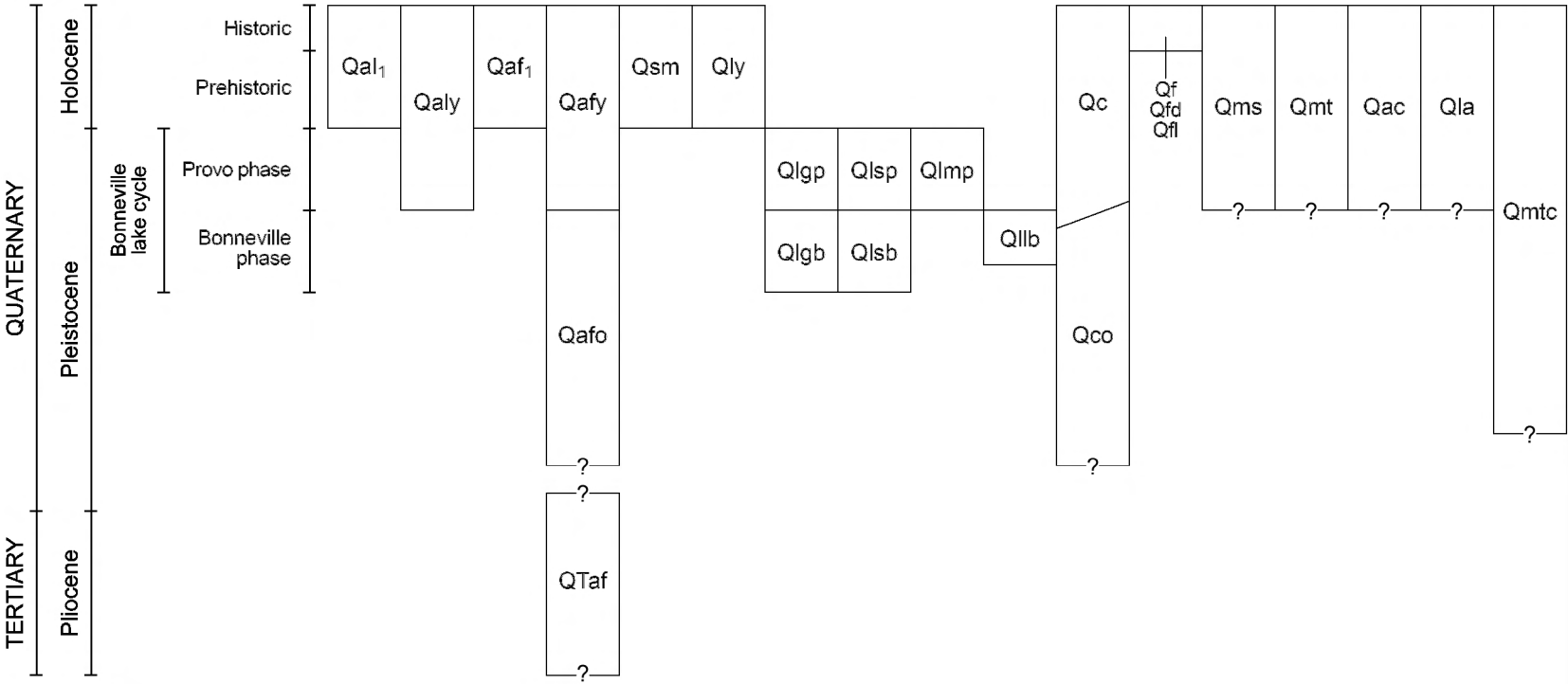

CORRELATION OF BEDROCK UNITS
WEST MOUNTAIN QUADRANGLE

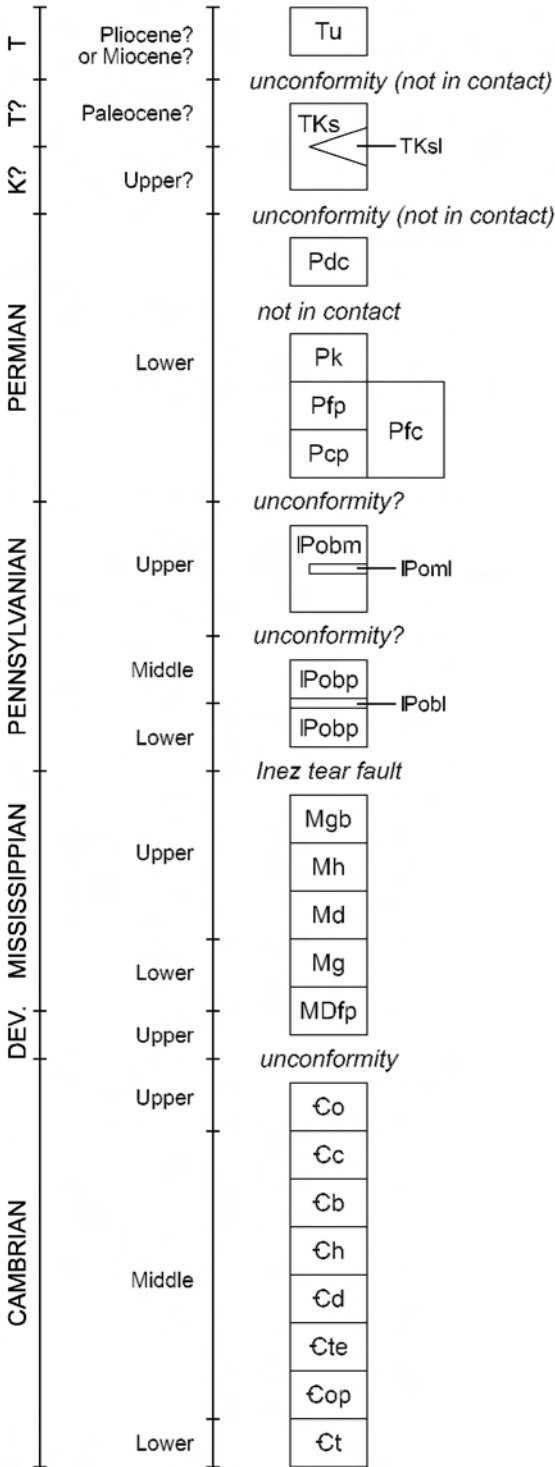

LITHOLOGIC COLUMN
West Mountain Quadrangle

TIME-STRATI-GRAPHIC UNIT			FORMATION AND GROUP / Marker unit	SYMBOL	THICKNESS Feet (Meters)	LITHOLOGY	
T	Pl? or M?		Tertiary strata	Tu	20+ (6+)		Payson Station
NOT IN CONTACT							
T?	Paleo?		Tertiary-Cretaceous strata	TKs	0-200 (0-60)		"Caps" Oquirrh Group near crest of mountain
			LS unit	TKsl	0-40 (0-10)		
K?	U?			TKs			
NOT IN CONTACT							
PERMIAN	Lower	Leonardian	Diamond Creek Formation	Pdc	200+ (60+)		Payson Station
			NOT IN CONTACT				
			Kirkman Formation	Pk	1000+ (300+)		Top not exposed Fusulinids
		Wolfcampian	Freeman Peak and Curry Peak Formations, undivided: Freeman Peak Formation	Pfp	?		
			Freeman Peak and Curry Peak Formations, undivided: Curry Peak Formation	Pcp (Pfc)	1500+ (500+)	2000+ (600+)	Fusulinids Fusulinids
							Unconformity?
PENNSYLVANIAN	Upper	Virgilian	Oquirrh Group	IPobm			
			limestone marker unit	IPoml	0-100 (0-30)		Fusulinids
		Missourian	Bingham Mine Formation	IPobm	4000 (1200)		
							Unconformity?
	Lower to Middle	Desmoinesian	Butterfield Peaks Formation	IPobp	7300+ (2200+)	11,300+ (3500+)	Quartzite
			limestone marker unit	IPobl	40-100 (12-30)		Uppermost spherical black chert beds
				IPobp			Conodonts
		Atokan?					Base not exposed
INEZ TEAR FAULT							
MISSISSIPPIAN	Upper		Great Blue Formation	Mgb	1200+ (400+)		Top not exposed
			Humbug Formation	Mh	785 (240)		
			Deseret Limestone	Md	765 (235)		
	Lower		Gardison Limestone	Mg	620 (190)		
D	U		Fitchville Formation and Pinyon Peak Ls, undivided	MDfp	300 (90)		Unconformity
CAMBRIAN	U		Opex Formation?	Ꞓo	220-470+ (65-144+)		
	Middle		Cole Canyon Dolomite	Ꞓc	287-495 (88-151)		Laminated and mottled
			Bluebird Dolomite	Ꞓb	198-305 (60-95)		White twiggy bodies
			Herkimer Limestone	Ꞓh	324-339 (99-103)		
			Dagmar Dolomite	Ꞓd	31-57 (9-17)		Key marker unit
			Teutonic Limestone	Ꞓte	360 (110)		Oolitic and pisolitic
			Ophir Formation	Ꞓop	307 (94)		
	Lower		Tintic Quartzite	Ꞓt	700+ (200+)		Base not exposed

Main West Mountain block — North of Inez tear fault

White Lake and Keigley Quarry Hills — South of Inez tear fault

Map and Section Symbols

Contact, dashed where approximately located, queried where uncertain

Marker bed

Normal fault, dashed where approximately located, dotted where concealed and approximately located; query indicates uncertain presence; bar and ball on down-dropped side; arrows show relative direction of movement on cross section

Normal fault, concealed; bar and ball on down dropped side; located by geophysical methods (Brimhall and others, 1976).

Tear fault, dashed where approximately located, dotted where concealed and approximately located; arrows show relative direction of movement, queried where uncertain

Thrust fault, dashed where approximately located, dotted where concealed and approximately located; teeth on upper plate; arrows show relative direction of movement on cross section

Detachment fault, dashed where approximately located, dotted where concealed and approximately located; half-circles on upper plate

Axial trace of anticline, dashed where approximately located

Axial trace of syncline, dashed where approximately located

Lake Bonneville shorelines – Major shorelines of the Bonneville lake cycle. Mapped at the top of the wave-cut platform. Crittenden (1963) and Curry (1982) provide data on shoreline elevations and the highest beach ridge in section 15, T. 9 S., R. 1 E.

Highest shoreline of the Bonneville (transgressive) phase

Highest shoreline of the Provo (regressive) phase

Crest of Lake Bonneville offshore bar or spit

Landslide scarp - dashed where approximately located, hachures on down-dropped side

A A′ Line of cross section

Bedding form lines on cross section

Line of measured section (John Welsh, unpublished data, 1978)

Strike and dip of bedding in sedimentary rocks -

20 Inclined

Vertical

54 Overturned

1 Inclined-Approximate

Mine/Adit, c = calcite, no letter = unknown

Quarry, cr = crushed rock

Prospect, c = calcite, Fe = iron, no letter = unknown

Sand and gravel pit

Former shaft, Fe = iron

W-10 Ve Rock/fossil sample location and number, with age abbreviation (see Table 1 for age data)

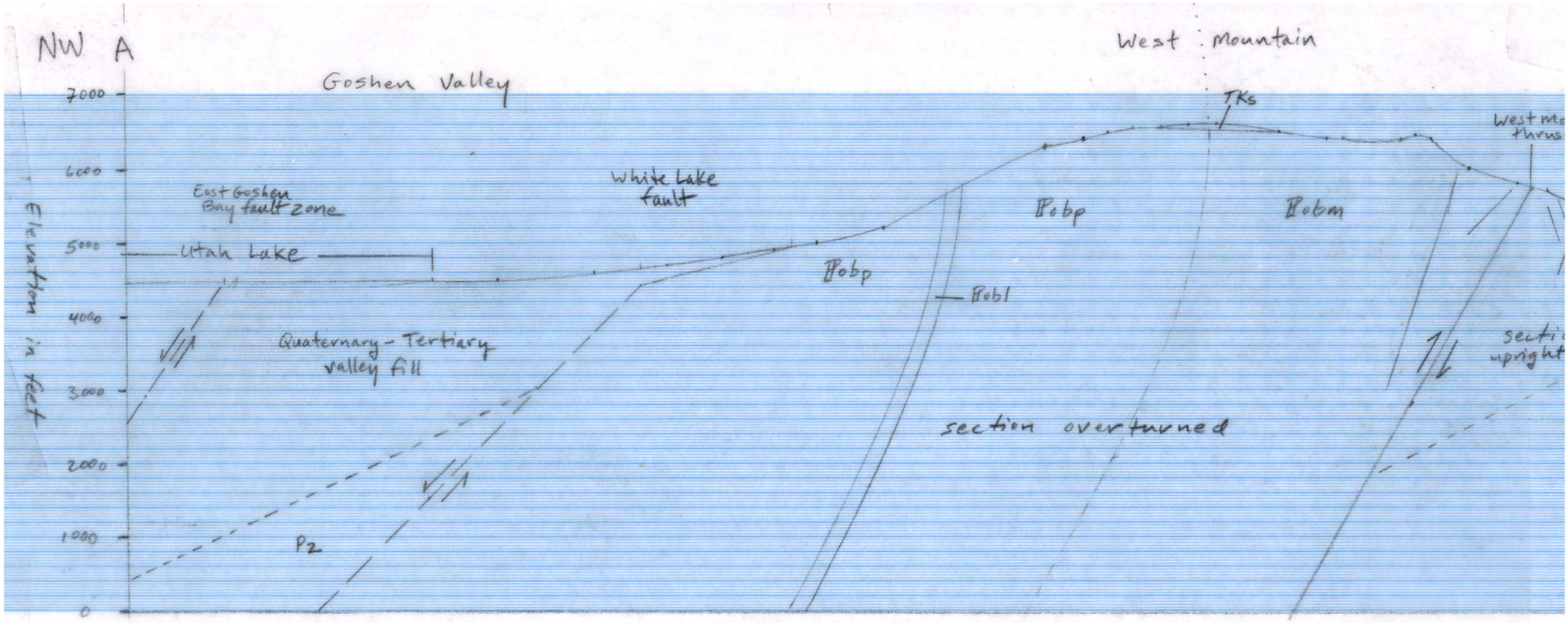

7/3/06 West Mountain Quadrangle OFR 482

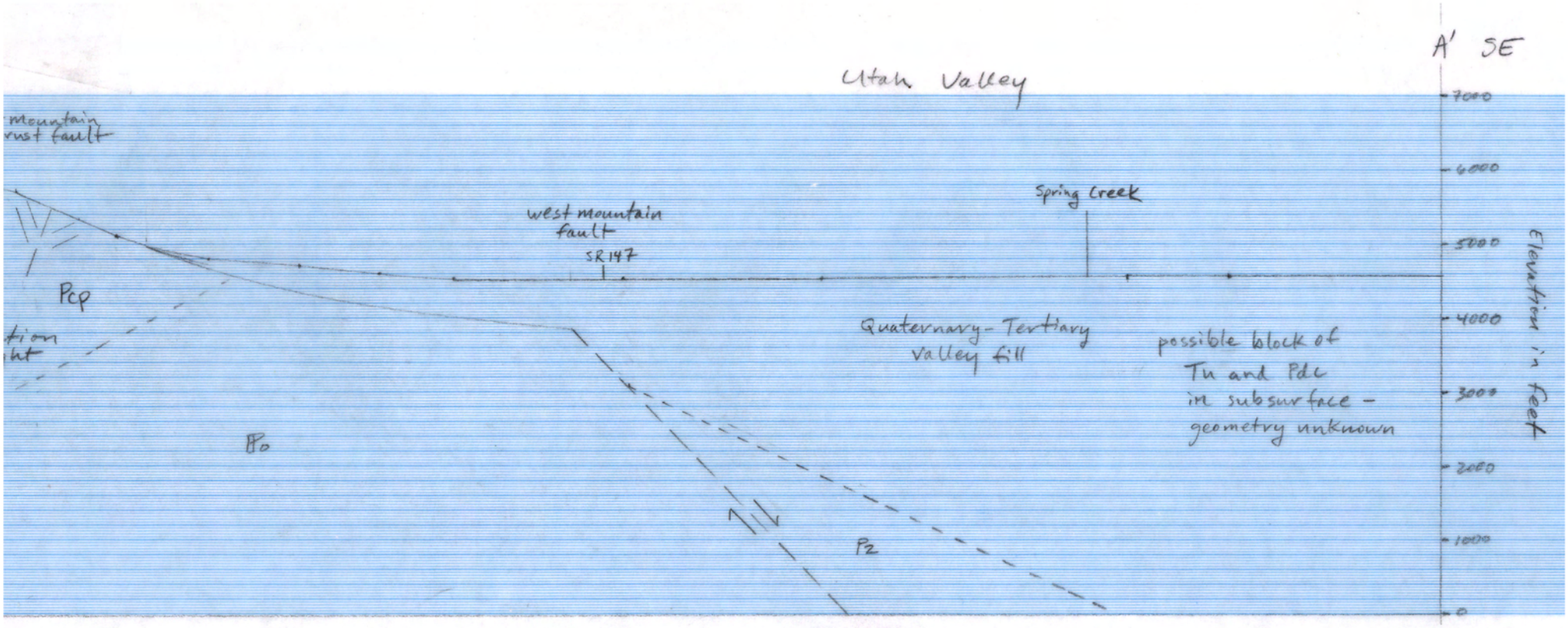
A' SE
Utah Valley
mountain
rust fault
Pcp
tion
ht
Po
west mountain
fault
SR147
Spring Creek
Quaternary-Tertiary
valley fill
possible block of
Tu and Pdc
in subsurface -
geometry unknown
Pz
7000
6000
5000
4000
3000
2000
1000
0
Elevation in feet

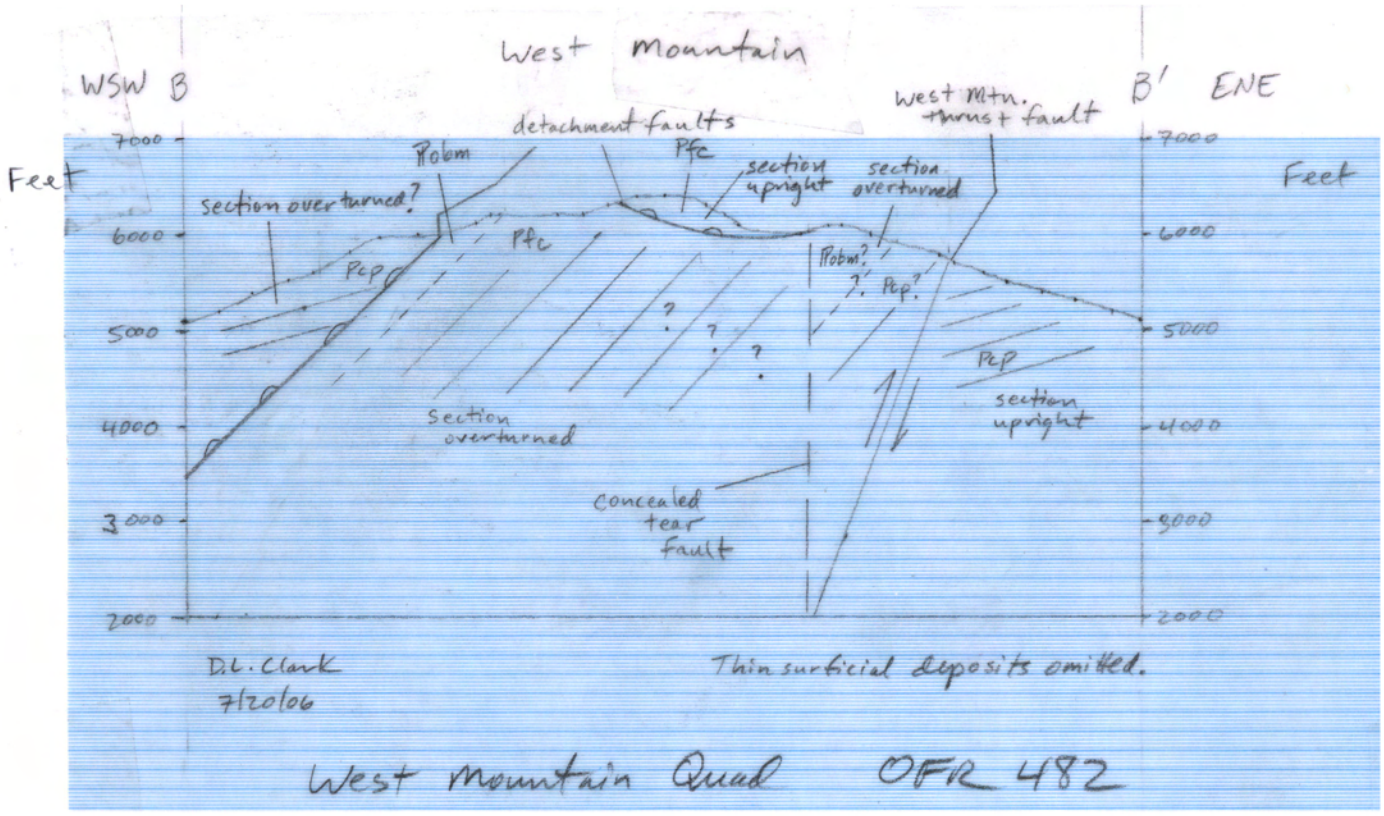

West Mountain Quad OFR 482